COMHAIRLE BAILE THUAMA
Tuam Town Council

Cleireach an Bhaile,
Halla an Bhaile,
Tuaim, Co. na Gaillimhe.

Tel: 093 242 46
Fax: 093 70463
Email: tclerk@tuamtc.galwaycoco.ie

Town Clerks Office,
Town Hall,
Tuam, Co Galway.

Our Ref:

Your Ref:

Town HALL
St MARY'S &
Cathedral
Wall & Bridge
Ann Marie McHugh
memorial garden
old grave yard
Mill Museum
PARK

8th January, 2008

Mr. Frank Gilmore,
Director of Services,
Galway county Council,
County Hall,
Galway.

Re: National Development Plan (NDP) 2007-2013
Infrastructure fund-Historic Town Trails

Dear Mr. Gilmore,

Attached is letter dated 22nd November, 2007 from Product Management Officer, Heritage & visitor Attractions, Failte Ireland together with application forms etc. which was discussed at last nights meeting of Tuam Town Council.

Yours sincerely,

Angela Holian,
Town Clerk

Galway County Council Archives

Fáilte Ireland
National Tourism Development Authority

Ms. Angela Holihan
Town Clerk
Tuam Town Council
Town Hall
Tuam
Co Galway

Cc: Martina Moloney, County Manager, Galway County Council
Fiona Monaghan, General Manager, Fáilte Ireland West Region

22nd November, 2007

Re :National Development Plan (NDP) 2007-2013
Infrastructure Fund – Historic Town Trails

Dear Ms. Holihan,

You will be aware that Failte Ireland, under the National Development Plan (NDP) 2007-2013, is providing funding for a range of Tourism Infrastructural Developments around the country. As part of this programme of investment, funding is now being made available to assist local authorities in developing Historic Town Trails in selected towns, by providing a range of tourist signage, interpretive & information boards.

While there has been continuous growth in Ireland's suburban areas since the mid-1990s, the historic centre of our cities, towns and villages remains a core tourism product, and development in these has been less systematic. With this in mind, Failte Ireland has carried out an aesthetic appraisal of 100 of Ireland's most architecturally distinctive and characteristic historic towns and villages, and the findings are contained in reports by Shaffrey Associates Architects. One of the key findings of this study was that the historic centre of many of our towns is often poorly interpreted and inaccessible for visitors, with minimal signage & interpretation available to describe to them the history of the town and its locale, and as a result the full tourism potential of the town and its surrounding area is underexploited.

Moreover, research shows that these historic towns will become increasingly important to tourism in the future, as visitors continue to travel to urban areas for short breaks. Their Medieval and Georgian quarters, as well as their 18th & 19th century characteristics and vernacular qualities, have high heritage value and provide a popular attraction for visitors. They also serve as a backdrop for a range of other activities & events in both the immediate and surrounding areas of the towns in question.

The aim therefore of this new Historic Town Trails funding programme is to maximise the tourism potential in historic towns and enhance the visitor's overall experience of them and their wider area, by developing a coherent, consistent and trustworthy set of pedestrian signs, to ensure that the experiences of visitors are pleasant, stimulating and welcoming, and that they can explore an historic town with ease and

Baggot Street Bridge
Dublin 2
Ireland

Phone 1890 525 525
or +353 1 602 4000
Fax +353 1 855 6821

Email info@failteireland.ie
www.failteireland.ie

Galway County Council Archives

comfort. Your town has been chosen as a priority for consideration for funding under phase one of this programme.

Detailed guidelines regarding the signage and interpretation boards which can be funded under this programme have been set out in a report from consulting engineers, RPS. These guidelines, together with the funding application form, have been forwarded to you by e-mail to your email address. Application forms may be submitted by email only to historic.towns@failteireland.ie.The closing date for submission is **Monday, January 29th, 2008**.

This programme is operating within a national template, as it is vitally important that the touring visitor experiences of consistency and ease of use in exploring several historic towns. The attached stand-alone briefing note will give you a greater sense of what is being sought consistently across a number of towns. Should you have any queries regarding the programme or application form please feel free to contact any member of the team as listed below.

We look forward to receiving your proposals by **Monday, January 29th 2008.**

Yours sincerely,

Maeve McKeever

Maeve McKeever
Product Management Officer
Heritage & Visitor Attractions
Failte Ireland
Amiens St
Dublin 1

Galway County Council Archives

Historic Town Trails Team:

Fiona Maddock	Tel : 01 6024214
Maeve McKeever	Tel : 01 8847136
Beverley Sherwood	Tel : 01 6024365

Dear Angela,
As discussed please
find enclosed the
briefing information for the Historic towns
initiative.
Kind Regards
from Maddock.

Fáilte Ireland
National Tourism Development Authority

With compliments

Baggot Street Bridge
Dublin 2
Ireland

Phone 1890 525 525
or +353 1 602 4000
Fax +353 1 855 6821

Email info@failteireland.ie
www.failteireland.ie

22nd November, 2007

Re :National Development Plan (NDP) 2007-2013
Infrastructure Fund – Historic Town Trails

Dear Ms. Holihan,

You will be aware that Failte Ireland, under the National Development Plan (NDP) 2007-2013, is providing funding for a range of Tourism Infrastructural Developments around the country. As part of this programme of investment, funding is now being made available to assist local authorities in developing Historic Town Trails in selected towns, by providing a range of tourist signage, interpretive & information boards.

While there has been continuous growth in Ireland's suburban areas since the mid-1990s, the historic centre of our cities, towns and villages remains a core tourism product, and development in these has been less systematic. With this in mind, Failte Ireland has carried out an aesthetic appraisal of 100 of Ireland's most architecturally distinctive and characteristic historic towns and villages, and the findings are contained in reports by Shaffrey Associates Architects. One of the key findings of this study was that the historic centre of many of our towns is often poorly interpreted and inaccessible for visitors, with minimal signage & interpretation available to describe to them the history of the town and its locale, and as a result the full tourism potential of the town and its surrounding area is underexploited.

Moreover, research shows that these historic towns will become increasingly important to tourism in the future, as visitors continue to travel to urban areas for short breaks. Their Medieval and Georgian quarters, as well as their 18th & 19th century characteristics and vernacular qualities, have high heritage value and provide a popular attraction for visitors. They also serve as a backdrop for a range of other activities & events in both the immediate and surrounding areas of the towns in question.

The aim therefore of this new Historic Town Trails funding programme is to maximise the tourism potential in historic towns and enhance the visitor's overall experience of them and their wider area, by developing a coherent, consistent and trustworthy set of pedestrian signs, to ensure that the experiences of visitors are pleasant, stimulating and welcoming, and that they can explore an historic town with ease and

Gone to
Mr. Gilmore Dir of
8-1-08
al

Baggot Street Bridge
Dublin 2
Ireland

Phone 1890 525 525
or +353 1 602 4000
Fax +353 1 855 6821

Email info@failteireland.ie
www.failteireland.ie

Galway County Council Archives

Fáilte Ireland
National Tourism Development Authority

Ms. Angela Holihan
Town Clerk
Tuam Town Council
Town Hall
Tuam
Co Galway

Cc: Martina Moloney, County Manager, Galway County Council
Fiona Monaghan, General Manager, Fáilte Ireland West Region

22nd November, 2007

Re :National Development Plan (NDP) 2007-2013
Infrastructure Fund – Historic Town Trails

Dear Ms. Holihan,

You will be aware that Failte Ireland, under the National Development Plan (NDP) 2007-2013, is providing funding for a range of Tourism Infrastructural Developments around the country. As part of this programme of investment, funding is now being made available to assist local authorities in developing Historic Town Trails in selected towns, by providing a range of tourist signage, interpretive & information boards.

While there has been continuous growth in Ireland's suburban areas since the mid-1990s, the historic centre of our cities, towns and villages remains a core tourism product, and development in these has been less systematic. With this in mind, Failte Ireland has carried out an aesthetic appraisal of 100 of Ireland's most architecturally distinctive and characteristic historic towns and villages, and the findings are contained in reports by Shaffrey Associates Architects. One of the key findings of this study was that the historic centre of many of our towns is often poorly interpreted and inaccessible for visitors, with minimal signage & interpretation available to describe to them the history of the town and its locale, and as a result the full tourism potential of the town and its surrounding area is underexploited.

Moreover, research shows that these historic towns will become increasingly important to tourism in the future, as visitors continue to travel to urban areas for short breaks. Their Medieval and Georgian quarters, as well as their 18th & 19th century characteristics and vernacular qualities, have high heritage value and provide a popular attraction for visitors. They also serve as a backdrop for a range of other activities & events in both the immediate and surrounding areas of the towns in question.

The aim therefore of this new Historic Town Trails funding programme is to maximise the tourism potential in historic towns and enhance the visitor's overall experience of them and their wider area, by developing a coherent, consistent and trustworthy set of pedestrian signs, to ensure that the experiences of visitors are pleasant, stimulating and welcoming, and that they can explore an historic town with ease and

Baggot Street Bridge
Dublin 2
Ireland

Phone 1890 525 525
or +353 1 602 4000
Fax +353 1 855 6821

Email info@failteireland.ie
www.failteireland.ie

Galway County Council Archives

comfort. Your town has been chosen as a priority for consideration for funding under phase one of this programme.

Detailed guidelines regarding the signage and interpretation boards which can be funded under this programme have been set out in a report from consulting engineers, RPS. These guidelines, together with the funding application form, have been forwarded to you by e-mail to your email address. Application forms may be submitted by email only to historic.towns@failteireland.ie.The closing date for submission is **Monday, January 29th, 2008**.

This programme is operating within a national template, as it is vitally important that the touring visitor experiences of consistency and ease of use in exploring several historic towns. The attached stand-alone briefing note will give you a greater sense of what is being sought consistently across a number of towns. Should you have any queries regarding the programme or application form please feel free to contact any member of the team as listed below.

We look forward to receiving your proposals by **Monday, January 29th 2008.**

Yours sincerely,

Maeve McKeever

Maeve McKeever
Product Management Officer
Heritage & Visitor Attractions
Failte Ireland
Amiens St
Dublin 1

Galway County Council Archives

Historic Town Trails Team:	Fiona Maddock	Tel : 01 6024214
	Maeve McKeever	Tel : 01 8847136
	Beverley Sherwood	Tel : 01 6024365

Fiona Ray - will send out application forms.
5-12-07
ah

APPLICATION FORM

Fáilte Ireland
National Tourism Development Authority

TOURISM DEVELOPMENT SUPPORTS

INFRASTRUCTURE FUND
HISTORIC TOWN TRAILS

Important
Before completing this form please read the RPS Guidelines for Historic Town Trails.

All sections of the application form must be completed, including the signatures on Page 8.

Full explanations should be given and all assumptions underlying the figures/proposals should be declared to Fáilte Ireland and all back up/supporting documentation should be submitted with the application form and cross referenced as appropriate.

Galway County Council Archives

TOURISM INFRASTRUCTURE FUND

GUIDELINES FOR THE PROVISION OF PEDESTRIAN TOURIST SIGNAGE IN HISTORIC TOWNS

Introduction

Attached are the explanatory operational guidelines for local authorities for the Provision of Pedestrian Tourist Signage in Historic Towns, being implemented by Fáilte Ireland as part of the National Development Plan 2007-2013.

All applications must be submitted and processed in accordance with these guidelines.

Eligibility

Fáilte Ireland shall actively seek applications from Local Authorities for funding to develop a range of consistent Pedestrian Tourist Signage in a series of key Historic Towns around the country as identified in the Shaffrey report.

Grant Levels

While Failte Ireland will fully fund the cost of materials and externally supplied services, local authorities will be required to contribute to the success of the initiative by taking full responsibility for the provision of all necessary print and web collateral, including the amendment of existing information material on their town.

Application Process

Applications must use the prescribed application form. The application form must be submitted online to Fáilte Ireland to the following email address:
ndp.development@failteireland.ie

Assessment Process

Fáilte Ireland's assessment team shall fully evaluate all applications and complete an evaluation report. An internal assessment committee will review the reports and confirm, or otherwise, the recommendations arising therefrom.

The National Tourism Development Authority will consider all recommendations arising from the Internal Assessment Committee's review before granting an approval, deferral or rejection decision.

Where projects are fully approved a Letter of Offer will be sent to the successful applicant. This letter will form the basis of the contract between Fáilte Ireland and the Promoter.

Standards/Best Practice Guidance

Where applicable, links are contained in the application form to the relevant standards/best practice guidance.

Further Information / Assistance

Fáilte Ireland executives shall be available at all stages to consult and assist applicants.

Galway County Council Archives

SECTION A – APPLICANT DETAILS	
Name of Applicant	
Contact Person	
Job Title	
Address of Applicant	
Telephone	
Mobile Phone	
Fax	
Contact Email Address	
Full Project Name	
Full Project Address	
SECTION B – PROJECT INFORMATION	
1. Does this project require planning permission (other than Part VIII Consultation)? If yes what is the current status of securing such permission?	
2. Please detail how the project will be maintained, including who will manage and maintain the infrastructure, the likely cost who will pay for it, and provide confirmation these measures will be in place for the ten year grant period.	
SECTION C – PROJECT DETAIL	
1. List all the principal sites/attractions of interest in your town to be identified in any signage development.	
2. List the walking routes around your town which have potential for development as an Historic Tourist Walking Route.	1. 2. 3. 4. 5.
3. Identify the starting point for each of the routes you have identified above.	1. 2. 3. 4. 5.

Galway County Council Archives

4. For each route identified in Point 2 above, please indicate:	Route 1	Route 2	Route 3	Route 4	Route 5
a. Route length in time & distance.					
b. What are the points of tourist interest/sites/attractions along the route.					
c. Width and condition of footpaths along the route.					
d. Pedestrian facilities along the route (e.g. pedestrian crossings etc).					
e. Disabled facilities along the route (e.g. ramps, dropped kerbs etc).					
f. Is there any additional public lighting required along the route. If yes please confirm you will provide same.					
g. At the start of the route, what parking facilities are currently in place?					

Please complete information per above for ALL routes you have listed in Point 2 above. Where spacing within this form is insufficient for full responses to questions and information requests, please attach additional response sheets as required.	
5. What are the main access points to your town by public or private transport ?	
6. How are these access points integrated into the proposed Tourist Walking Routes (i.e. indicate proximity of starting point of each route to public or private transport access).	
7. Indicate how many Orientation signs are required in your town (vis. the above access points).	
8. Where do you propose positioning each of these Orientation signs? (location –	

Galway County Council Archives

street name, building name etc)	
9. Indicate how many Directional signs are required in your town to guide visitors around the Walking Trail.	
10. Where do you propose positioning each of these Directional Signs? (location – street name, building name etc)	
11. Indicate how many Interpretive signs are required along the proposed routes for development.	
12. Where do you propose positioning each of these Interpretive signs? (location – street name, building name etc)	
0SECTION D – PROFESSIONAL ADVISORS	
For all professional advisors (including – solicitor, accountant, architect, quantity surveyor etc) provide the following:	
Solicitor **Company Name** **Contact Name** **Address** **Tel** **Fax** **Email**	
Accountant **Company Name** **Contact Name** **Address** **Tel** **Fax** **Email**	
Architect **Company Name** **Contact Name** **Address** **Tel** **Fax** **Email**	
Quantity Surveyor **Company Name** **Contact Name** **Address** **Tel**	

Galway County Council Archives

Fax **Email**	
Other **Profession** **Company Name** **Contact Name** **Address** **Tel** **Fax** **Email**	
Other **Profession** **Company Name** **Contact Name** **Address** **Tel** **Fax** **Email**	

Applicants will be notified in writing of grant approval by Fáilte Ireland and this notification only will be evidence of grant approval.

DISCLOSURE OF INFORMATION ACT – FREEDOM OF INFORMATION

Failte Ireland wishes to advise applicants that, under the Freedom of Information Act (which came into force on 21st April 1998), the information supplied in the application form may be made available on request, subject to Fáilte Ireland's obligations under law.

You are asked to consider if any of the information supplied by you in this application should not be disclosed because of sensitivity. If this is the case you should, when providing the information, identify same and specify the reasons for its sensitivity. Fáilte Ireland will consult with you about sensitive information before making a decision on any Freedom of Information request received.

DISCLAIMER

Please read carefully.

It will be a condition of any application for funding under the terms and conditions of the Tourism Product Development Programme for Historic Town Trails that the Applicant has read, understood and accepted the following:

Neither Fáilte Ireland nor the Department of Arts, Sports and Tourism or their agents or assignees shall be liable to the Applicant or any other party, in respect of loss, damage or costs of any nature arising directly or indirectly from:

a. **The application or the subject matter of the application.**
b. **The rejection for any reason of any application.**

Neither Fáilte Ireland nor the Department of Arts, Sports and Tourism or their agents or assignees shall be held responsible or liable , at any time in any circumstances, in relation to any matter whatsoever in connection with the development, planning, construction, operation, management and/or administration of individual projects.

Galway County Council Archives

DECLARATION BY APPLICANTS

We apply for funding under the Tourism Product Development Programme for Historic Town Trails.

_____

Project Name

_____

Applicants Name

We have read and understood the Tourism Product Development Programme for Historic Town Trails Guidelines and we are aware of and accept all of the requirements laid down in them. If our proposal is approved for grant assistance, we confirm that we agree to comply in full with all of those requirements.

We certify that all the information provided in this application is accurate and all information provided in any supporting documentation is truthful and accurate.

We also confirm we will provide suitable web collateral, including a map, on our website and make same available to Failte Ireland for use as deemed appropriate.

Signed_____	**Signed**_____
Dated_____	**Dated**_____
Name _____ **(BLOCK CAPITALS)**	**Name** _____ **(BLOCK CAPITALS)**
Position _____	**Position** _____
On behalf of _____ **(organisation/company name)**	**On behalf of** _____ **(organisation/company name)**
Telephone No. _____	**Telephone No.** _____

THE DECLARATION SHOULD BE SIGNED BY TWO PERSONS WHO MUST BE AUTHORISED SIGNATORIES

For FI Office use only.

Galway County Council Archives

Historic Towns Initiative

In Failte Ireland's Tourism Product Development Strategy 2007-2013, Ireland's Historic Cities, Towns and Villages were identified as a product which would benefit from the introduction of a programme of investment, to help to exploit the tourism potential of such towns. Research shows that the historic centre of our cities, towns and villages remains a core tourism product, with almost 60% of respondents in Failte Ireland's Visitor Attitudes Survey 2006 singling out the attractiveness of such towns as being 'Very Important' to them in considering Ireland for their holiday. Moreover, these historic towns will become increasingly important to tourism in the future, as visitors continue to travel to urban areas for short breaks. The towns' medieval and Georgian quarters, as well as their 18th & 19th century characteristics and vernacular qualities, have high heritage value and provide a popular attraction for visitors, particularly amongst those in our key target consumer segment of Sightseers and Culture seekers. They also serve as a backdrop for a range of other activities & events in both the immediate and surrounding areas of the towns in question.

With this in mind, Failte Ireland carried out an aesthetic appraisal of 100 of Ireland's most architecturally distinctive and characteristic historic towns and villages, the findings of which are contained in a report by Shaffrey Associates Architects entitled 'The Irish Towns Study'. One of the key findings of this study was that the historic centre of many of our towns is often poorly interpreted which makes them inaccessible for visitors, with minimal signage & information available to describe to them the history of the town and its locale. The study also found that generic building design, which takes no account of local architectural character, is leading to an erosion of the qualities that make many of our towns and villages visually unique and distinctive. Given that infrastructural investment and development in these towns has been less systematic than in our suburban areas, the full tourism potential of the town and its surrounding area has therefore been consistently underexploited.

So to address these issues, and begin a process whereby the potential of these towns can be developed, Failte Ireland is introducing an initiative to develop a series of Historic Walking Trails in up to 100 towns around the country. This initiative is being funded under the National Development Plan (NDP) 2007-2013 Tourism Product Development Fund. In this instance funding is being made available to assist local authorities in the identified towns to provide a range of tourist signage, including orientation, interpretive & information boards, along a designated Historic Trail (or Trails) which guides the visitor around the town. The aim is to maximise the tourism potential of the Historic Towns in question and enhance the visitor's overall experience, by developing a nationally coherent, consistent and trustworthy set of pedestrian signs. This is to ensure that the experiences of visitors are pleasant, stimulating and welcoming, and that they can explore an historic town with ease & comfort.

With the incoming visitor being the end user of the product, their needs should be paramount in determining the layout, style and presentation of any pedestrian signage system put in place. In particular, the visitor's ease of navigation around the towns in question is the fundamental element, therefore it is required that the signage scheme implemented under this funding initiative follows a national template, which will offer consistency across the country. Such a consistency will bring the following benefits :

Appreciation and Interpretation:
Much of what is of interest to visitors in our historic towns is currently not well interpreted or made accessible to them. There is a strong need to identify the sites/points of interest and interpret some of their history to gain a full appreciation of the town.

Galway County Council Archives

Familiarity and Trust: Once the visitor becomes familiar with the signs (their colours, type styles, format etc.) they can move from one historic town to the next and easily follow other pedestrian signs. This will help avoid confusion and the need to ask for assistance. If the visitor comes to trust the signs they will be more likely to follow further signs without worrying about losing their way.

Clarity and Coherence: If all appropriate attractions within a given area are signed, and done so coherently, the tourist will be more likely to continue to explore the locality. A clear layout and sign arrangement will reduce confusion and lead to a smooth progression from sign to sign, destination to destination.

Economic Sense: The better the experience a visitor has of a town or locality, the more likely they are to either return or to recommend it to someone else. Moreover, the longer the visitor spends exploring the area, the more likely they are to contribute to the local economy. Having well constructed, durable signs leads to a low maintenance, long lasting system, which will save money in the long term. With such a signage system in place, tourists that had originally not intended visiting heritage sites may well be inclined to do so.

The proposed signage for the scheme will incorporate three different types of sign :

(i) Orientation signs ('you are here' map-type signs indicating the locations of sites of interest relative to a visitor's current position)

(ii) Directional signs (finger signs guiding visitors to and from sites of interest)

(iii) Interpretive signs (giving the visitor interpretive information relating to a particular attraction / site)

It is envisaged that a total of some 100 Historic Towns will be included in this development initiative altogether. Thirty-six of these towns have been selected for inclusion in Phase One (development in 2008). These 36 towns have been selected on the basis of their rating in terms of intrinsic interest in the Shaffrey Report, as well as their having a dedicated Town / Urban District Council to lead the project.

Detailed technical guidelines regarding the specification for the signs, as well as criteria for implementing the programme, have been prepared on Failte Ireland's behalf by consulting engineers, RPS. These guidelines will be distributed in soft copy (electronically)to each of the 36 Town Councils included in Phase One, together with Introductory Letter and Application Form. With a timetable to contact the Town Councils before end November 2007, a two month period has been allowed for the preparation of applications. The deadline of **Monday, January 29th, 2008** is being set for submission to Failte Ireland of applications.

We believe that this programme offers an opportunity to further build on, and further encourage the renewal and pro-active conservation currently underway within many of these towns. It presents a major opportunity to achieve significant progress in developing the infrastructure necessary for success in the ever-more challenging tourism market.

Galway County Council Archives

ELEVATION:

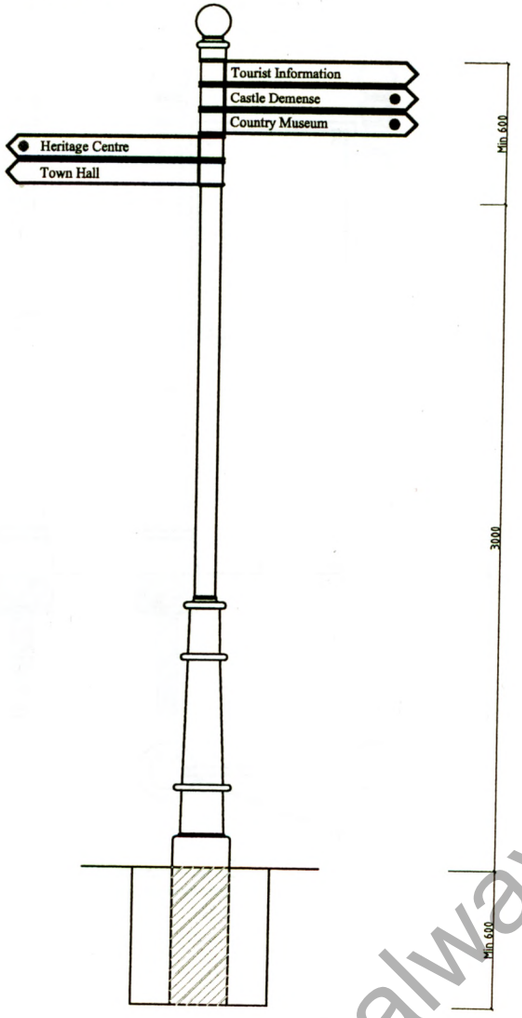

SINGLE LINE TEXT STRING:

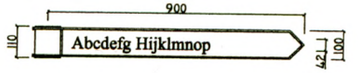

(FULL COLLAR)

(HALF COLLAR - UPPER)

(HALF COLLAR - LOWER)

DOUBLE LINE TEXT STRING:

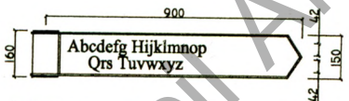

(FULL COLLAR)

(HALF COLLAR - UPPER)

(HALF COLLAR - LOWER)

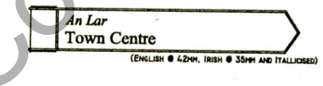

(EXAMPLE OF BILINGUAL DIRECTIONAL ARM)

TRIPLE LINE TEXT STRING:

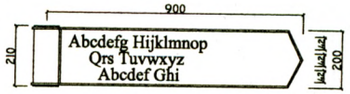

(FULL COLLAR)

(HALF COLLAR - UPPER)

(HALF COLLAR - LOWER)

GROUPED FULL COLLAR ASSEMBLY:

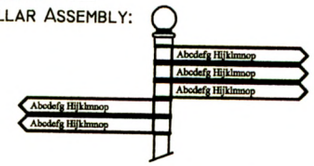

STAGGERED FULL COLLAR ASSEMBLY:

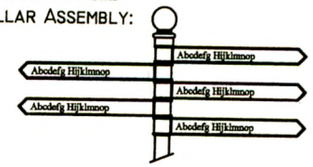

GROUPED HALF COLLAR ASSEMBLY:

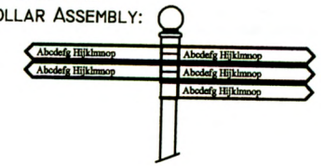

NOTES:

GENERAL
- ALL DIMENSIONS IN MILLIMETERS
- DO NOT SCALE

DIRECTIONAL FINGER ARMS
- ONE PIECE CAST ALUMINIUM, DOUBLE SIDED, WITH INTEGRAL COLLARS (FULL OR HALF)
- SMOOTH GLOSS FINISH, PAINTED DARK GREEN IN COLOUR (RAL COLOUR 6002 LEAF GREEN)
- RAISED LETTERING, PAINTED WHITE IN COLOUR (RAL COLOUR 9016 TRAFFIC WHITE)
- RAISED SYMBOLS (WHERE REQUIRED), PAINTED WHITE IN COLOUR (RAL COLOUR 9016 TRAFFIC WHITE)
- RAISED BORDER (WHERE REQUIRED), PAINTED WHITE IN COLOUR (RAL COLOUR 9016 TRAFFIC WHITE)

SUPPORT POSTS
- GALVANISED CIRCULAR HOLLOW STEEL SECTIONS, 89MM DIAMETER, RUNNING FULL LENGTH
- FITTED WITH ORNATE CAST IRON COLUMN BASE, AND BALL-TOP
- SMOOTH GLOSS FINISH, PAINTED DARK GREEN IN COLOUR (RAL COLOUR 6002 LEAF GREEN)

Galway County Council Archives

Fáilte Ireland National Tourism Development Authority	Fáilte Ireland Historic Town Signage Project	Pedestrian Tourist Signage	Issue	Date	Directional Signs	Drawing No.
			1.	23/10/07		DS0001

Standard Type I Interpretive Panel Sign

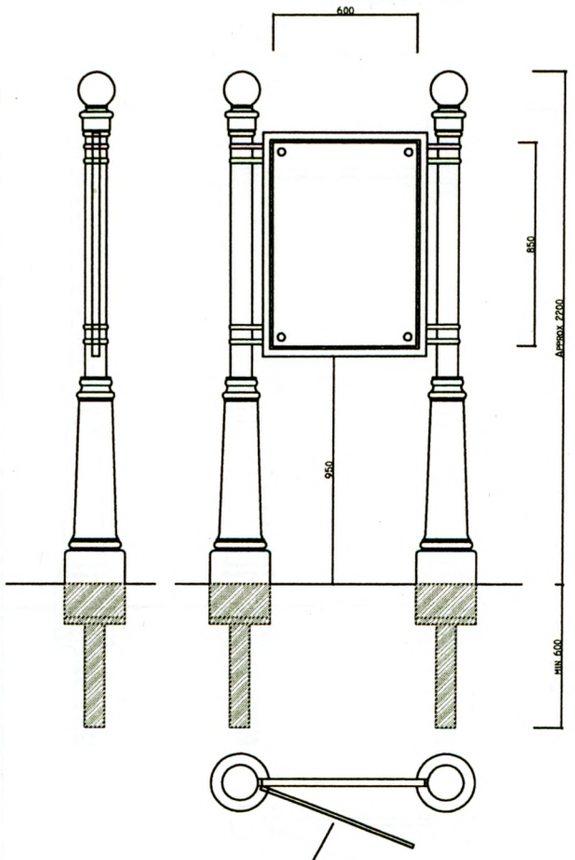

Large Type I Interpretive Panel Sign

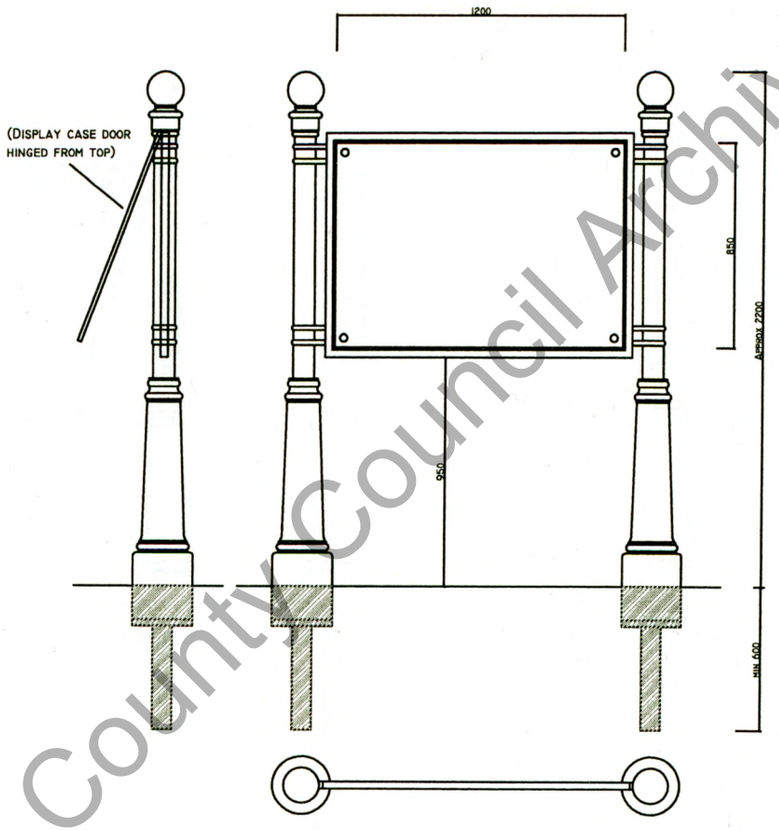

Type II Interpretive Plaque Sign

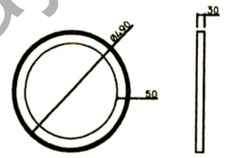

Display Case Construction Detail

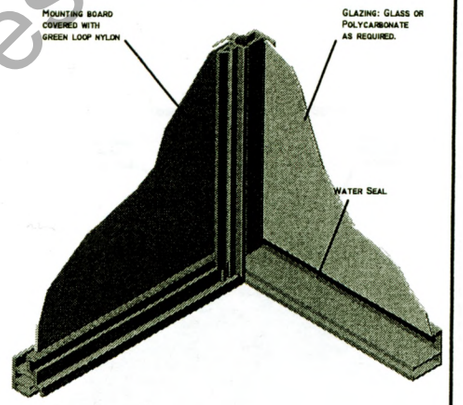

NOTES:

GENERAL
- ALL DIMENSIONS IN MILLIMETERS
- DO NOT SCALE

TYPE I - INTERPRETIVE DISPLAY CASE

- DOUBLE OR SINGLE SIDED DISPLAY CASE
- EXTRUDED ALUMINIUM FRAME AND DOOR
- POWDER COATED SMOOTH GLOSS FINISH, DARK GREEN IN COLOUR (RAL COLOUR 6002 LEAF GREEN)
- GLAZING PERIMETER SEALED ON BOTH SIDES WITH EPDM SEAL OR SIMILAR
- CONCEALED ANTI-VANDAL LOCKING SYSTEM
- DISPLAY CASE FLANGE MOUNTED ONTO SUPPORT POSTS

SUPPORT POSTS

- GALVANISED CIRCULAR HOLLOW STEEL SECTIONS, 89MM DIAMETER, RUNNING FULL LENGTH
- FITTED WITH ORNATE CAST IRON COLUMN BASE, AND BALL-TOP
- SMOOTH GLOSS FINISH, PAINTED DARK GREEN IN COLOUR (RAL COLOUR 6002 LEAF GREEN)

TYPE II - INTERPRETIVE PLAQUE

- CIRCULAR PLAQUE MADE FROM CAST ALUMINIUM
- POWDER COATED SMOOTH GLOSS FINISH, DARK GREEN IN COLOUR (RAL COLOUR 6002 LEAF GREEN)
- RAISED LETTERING, PAINTED WHITE IN COLOUR (RAL COLOUR 9016 TRAFFIC WHITE)
- RAISED SYMBOLS, PAINTED WHITE IN COLOUR (RAL COLOUR 9016 TRAFFIC WHITE UNLESS OTHERWISE REQUIRED)
- RAISED BORDER, PAINTED WHITE IN COLOUR (RAL COLOUR 9016 TRAFFIC WHITE)

Galway County Council Archives

Fáilte Ireland National Tourism Development Authority	Fáilte Ireland Historic Town Signage Project	Pedestrian Tourist Signage	Issue	Date	Interpretive Signs	Drawing No.
			1.	23/10/07		IS0001

STANDARD ORIENTATION PANEL SIGN

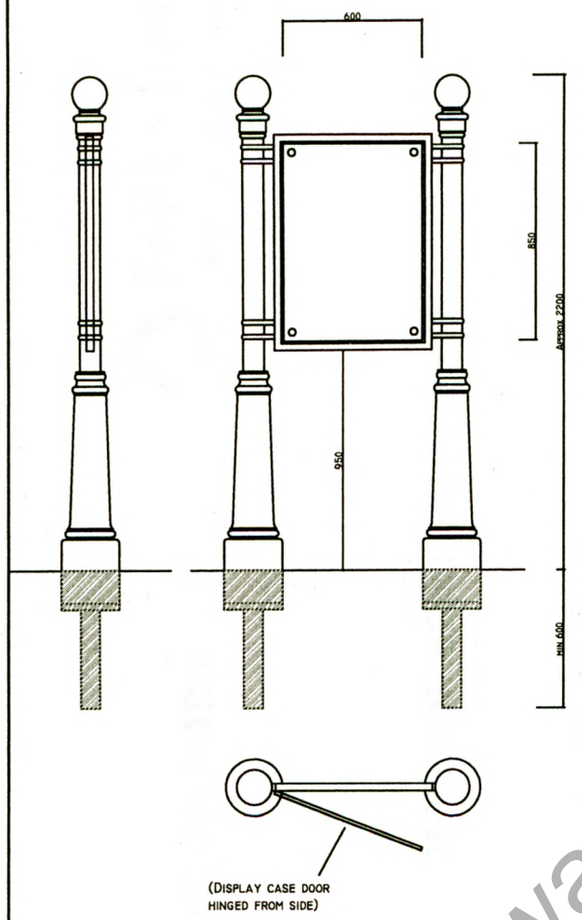

LARGE ORIENTATION PANEL SIGN

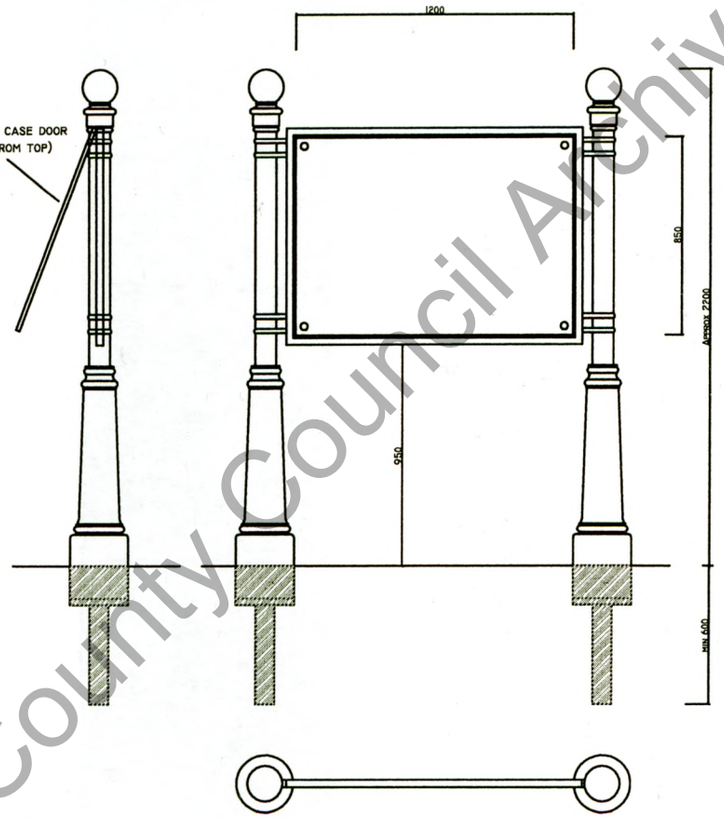

DISPLAY CASE CONSTRUCTION DETAIL

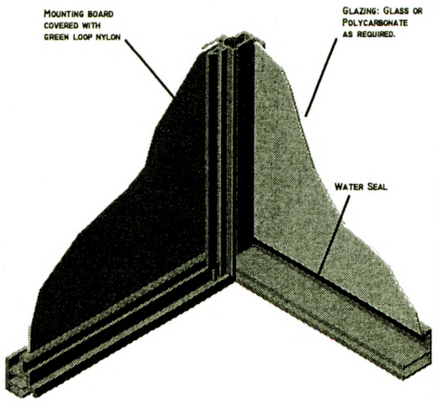

NOTES:

GENERAL
- ALL DIMENSIONS IN MILLIMETERS
- DO NOT SCALE

ORIENTATION DISPLAY CASE

- DOUBLE OR SINGLE SIDED DISPLAY CASE
- EXTRUDED ALUMINIUM FRAME AND DOOR
- POWDER COATED SMOOTH GLOSS FINISH, DARK GREEN IN COLOUR (RAL COLOUR 6002 LEAF GREEN)
- GLAZING PERIMETER SEALED ON BOTH SIDES WITH EPDM SEAL OR SIMILAR
- CONCEALED ANTI-VANDAL LOCKING SYSTEM
- DISPLAY CASE FLANGE MOUNTED ONTO SUPPORT POSTS

SUPPORT POSTS

- GALVANISED CIRCULAR HOLLOW STEEL SECTIONS, 89MM DIAMETER, RUNNING FULL LENGTH
- FITTED WITH ORNATE CAST IRON COLUMN BASE, AND BALL-TOP
- SMOOTH GLOSS FINISH, PAINTED DARK GREEN IN COLOUR (RAL COLOUR 6002 LEAF GREEN)

Galway County Council Archives

Fáilte Ireland National Tourism Development Authority	Fáilte Ireland Historic Town Signage Project	Pedestrian Tourist Signage	Issue	Date	Orientation Signs	Drawing No.
			1.	23/10/07		OS0001

APPLICATION FORM

Fáilte Ireland
National Tourism Development Authority

TOURISM DEVELOPMENT SUPPORTS

INFRASTRUCTURE FUND
HISTORIC TOWN TRAILS

Important
Before completing this form please read the RPS Guidelines for Historic Town Trails.

All sections of the application form must be completed, including the signatures on Page 8.

Full explanations should be given and all assumptions underlying the figures/proposals should be declared to Fáilte Ireland and all back up/supporting documentation should be submitted with the application form and cross referenced as appropriate.

Galway County Council Archives

TOURISM INFRASTRUCTURE FUND

GUIDELINES FOR THE PROVISION OF PEDESTRIAN TOURIST SIGNAGE IN HISTORIC TOWNS

Introduction

Attached are the explanatory operational guidelines for local authorities for the Provision of Pedestrian Tourist Signage in Historic Towns, being implemented by Fáilte Ireland as part of the National Development Plan 2007-2013.

All applications must be submitted and processed in accordance with these guidelines.

Eligibility

Fáilte Ireland shall actively seek applications from Local Authorities for funding to develop a range of consistent Pedestrian Tourist Signage in a series of key Historic Towns around the country as identified in the Shaffrey report.

Grant Levels

While Failte Ireland will fully fund the cost of materials and externally supplied services, local authorities will be required to contribute to the success of the initiative by taking full responsibility for the provision of all necessary print and web collateral, including the amendment of existing information material on their town.

Application Process

Applications must use the prescribed application form. The application form must be submitted online to Fáilte Ireland to the following email address:
ndp.development@failteireland.ie

Assessment Process

Fáilte Ireland's assessment team shall fully evaluate all applications and complete an evaluation report. An internal assessment committee will review the reports and confirm, or otherwise, the recommendations arising therefrom.

The National Tourism Development Authority will consider all recommendations arising from the Internal Assessment Committee's review before granting an approval, deferral or rejection decision.

Where projects are fully approved a Letter of Offer will be sent to the successful applicant. This letter will form the basis of the contract between Fáilte Ireland and the Promoter.

Standards/Best Practice Guidance

Where applicable, links are contained in the application form to the relevant standards/best practice guidance.

Further Information / Assistance

Fáilte Ireland executives shall be available at all stages to consult and assist applicants.

Galway County Council Archives

SECTION A – APPLICANT DETAILS	
Name of Applicant	
Contact Person	
Job Title	
Address of Applicant	
Telephone	
Mobile Phone	
Fax	
Contact Email Address	
Full Project Name	
Full Project Address	

SECTION B – PROJECT INFORMATION	
1. Does this project require planning permission (other than Part VIII Consultation)? If yes what is the current status of securing such permission?	
2. Please detail how the project will be maintained, including who will manage and maintain the infrastructure, the likely cost who will pay for it, and provide confirmation these measures will be in place for the ten year grant period.	

SECTION C – PROJECT DETAIL	
1. List all the principal sites/attractions of interest in your town to be identified in any signage development.	
2. List the walking routes around your town which have potential for development as an Historic Tourist Walking Route.	1. 2. 3. 4. 5.
3. Identify the starting point for each of the routes you have identified above.	1. 2. 3. 4. 5.

Galway County Council Archives

4. For each route identified in Point 2 above, please indicate:	Route 1	Route 2	Route 3	Route 4	Route 5
a. Route length in time & distance.					
b. What are the points of tourist interest/sites/attractions along the route.					
c. Width and condition of footpaths along the route.					
d. Pedestrian facilities along the route (e.g. pedestrian crossings etc).					
e. Disabled facilities along the route (e.g. ramps, dropped kerbs etc).					
f. Is there any additional public lighting required along the route. If yes please confirm you will provide same.					
g. At the start of the route, what parking facilities are currently in place?					

Please complete information per above for ALL routes you have listed in Point 2 above. Where spacing within this form is insufficient for full responses to questions and information requests, please attach additional response sheets as required.	
5. What are the main access points to your town by public or private transport ?	
6. How are these access points integrated into the proposed Tourist Walking Routes (i.e. indicate proximity of starting point of each route to public or private transport access).	
7. Indicate how many Orientation signs are required in your town (vis. the above access points).	
8. Where do you propose positioning each of these Orientation signs? (location –	

Galway County Council Archives

street name, building name etc)	
9. Indicate how many Directional signs are required in your town to guide visitors around the Walking Trail.	
10. Where do you propose positioning each of these Directional Signs? (location – street name, building name etc)	
11. Indicate how many Interpretive signs are required along the proposed routes for development.	
12. Where do you propose positioning each of these Interpretive signs? (location – street name, building name etc)	
0SECTION D – PROFESSIONAL ADVISORS	
For all professional advisors (including – solicitor, accountant, architect, quantity surveyor etc) provide the following:	
Solicitor **Company Name** **Contact Name** **Address** **Tel** **Fax** **Email**	
Accountant **Company Name** **Contact Name** **Address** **Tel** **Fax** **Email**	
Architect **Company Name** **Contact Name** **Address** **Tel** **Fax** **Email**	
Quantity Surveyor **Company Name** **Contact Name** **Address** **Tel**	

Galway County Council Archives

Fax **Email**	
Other **Profession** **Company Name** **Contact Name** **Address** **Tel** **Fax** **Email**	
Other **Profession** **Company Name** **Contact Name** **Address** **Tel** **Fax** **Email**	

Applicants will be notified in writing of grant approval by Fáilte Ireland and this notification only will be evidence of grant approval.

DISCLOSURE OF INFORMATION ACT – FREEDOM OF INFORMATION

Failte Ireland wishes to advise applicants that, under the Freedom of Information Act (which came into force on 21st April 1998), the information supplied in the application form may be made available on request, subject to Fáilte Ireland's obligations under law.

You are asked to consider if any of the information supplied by you in this application should not be disclosed because of sensitivity. If this is the case you should, when providing the information, identify same and specify the reasons for its sensitivity. Fáilte Ireland will consult with you about sensitive information before making a decision on any Freedom of Information request received.

DISCLAIMER

Please read carefully.

It will be a condition of any application for funding under the terms and conditions of the Tourism Product Development Programme for Historic Town Trails that the Applicant has read, understood and accepted the following:

Neither Fáilte Ireland nor the Department of Arts, Sports and Tourism or their agents or assignees shall be liable to the Applicant or any other party, in respect of loss, damage or costs of any nature arising directly or indirectly from:

a. **The application or the subject matter of the application.**
b. **The rejection for any reason of any application.**

Neither Fáilte Ireland nor the Department of Arts, Sports and Tourism or their agents or assignees shall be held responsible or liable , at any time in any circumstances, in relation to any matter whatsoever in connection with the development, planning, construction, operation, management and/or administration of individual projects.

Galway County Council Archives

DECLARATION BY APPLICANTS

We apply for funding under the Tourism Product Development Programme for Historic Town Trails.

_____

Project Name

_____

Applicants Name

We have read and understood the Tourism Product Development Programme for Historic Town Trails Guidelines and we are aware of and accept all of the requirements laid down in them. If our proposal is approved for grant assistance, we confirm that we agree to comply in full with all of those requirements.

We certify that all the information provided in this application is accurate and all information provided in any supporting documentation is truthful and accurate.

We also confirm we will provide suitable web collateral, including a map, on our website and make same available to Failte Ireland for use as deemed appropriate.

Signed_____	**Signed**_____
Dated_____	**Dated**_____
Name _____ **(BLOCK CAPITALS)**	**Name** _____ **(BLOCK CAPITALS)**
Position _____	**Position** _____
On behalf of _____ **(organisation/company name)**	**On behalf of** _____ **(organisation/company name)**
Telephone No. _____	**Telephone No.** _____

THE DECLARATION SHOULD BE SIGNED BY TWO PERSONS WHO MUST BE AUTHORISED SIGNATORIES

For FI Office use only.

Galway County Council Archives

Historic Towns Initiative

In Failte Ireland's Tourism Product Development Strategy 2007-2013, Ireland's Historic Cities, Towns and Villages were identified as a product which would benefit from the introduction of a programme of investment, to help to exploit the tourism potential of such towns. Research shows that the historic centre of our cities, towns and villages remains a core tourism product, with almost 60% of respondents in Failte Ireland's Visitor Attitudes Survey 2006 singling out the attractiveness of such towns as being 'Very Important' to them in considering Ireland for their holiday. Moreover, these historic towns will become increasingly important to tourism in the future, as visitors continue to travel to urban areas for short breaks. The towns' medieval and Georgian quarters, as well as their 18th & 19th century characteristics and vernacular qualities, have high heritage value and provide a popular attraction for visitors, particularly amongst those in our key target consumer segment of Sightseers and Culture seekers. They also serve as a backdrop for a range of other activities & events in both the immediate and surrounding areas of the towns in question.

With this in mind, Failte Ireland carried out an aesthetic appraisal of 100 of Ireland's most architecturally distinctive and characteristic historic towns and villages, the findings of which are contained in a report by Shaffrey Associates Architects entitled 'The Irish Towns Study'. One of the key findings of this study was that the historic centre of many of our towns is often poorly interpreted which makes them inaccessible for visitors, with minimal signage & information available to describe to them the history of the town and its locale. The study also found that generic building design, which takes no account of local architectural character, is leading to an erosion of the qualities that make many of our towns and villages visually unique and distinctive. Given that infrastructural investment and development in these towns has been less systematic than in our suburban areas, the full tourism potential of the town and its surrounding area has therefore been consistently underexploited.

So to address these issues, and begin a process whereby the potential of these towns can be developed, Failte Ireland is introducing an initiative to develop a series of Historic Walking Trails in up to 100 towns around the country. This initiative is being funded under the National Development Plan (NDP) 2007-2013 Tourism Product Development Fund. In this instance funding is being made available to assist local authorities in the identified towns to provide a range of tourist signage, including orientation, interpretive & information boards, along a designated Historic Trail (or Trails) which guides the visitor around the town. The aim is to maximise the tourism potential of the Historic Towns in question and enhance the visitor's overall experience, by developing a nationally coherent, consistent and trustworthy set of pedestrian signs. This is to ensure that the experiences of visitors are pleasant, stimulating and welcoming, and that they can explore an historic town with ease & comfort.

With the incoming visitor being the end user of the product, their needs should be paramount in determining the layout, style and presentation of any pedestrian signage system put in place. In particular, the visitor's ease of navigation around the towns in question is the fundamental element, therefore it is required that the signage scheme implemented under this funding initiative follows a national template, which will offer consistency across the country. Such a consistency will bring the following benefits :

Appreciation and Interpretation:
Much of what is of interest to visitors in our historic towns is currently not well interpreted or made accessible to them. There is a strong need to identify the sites/points of interest and interpret some of their history to gain a full appreciation of the town.

Galway County Council Archives

Familiarity and Trust: Once the visitor becomes familiar with the signs (their colours, type styles, format etc.) they can move from one historic town to the next and easily follow other pedestrian signs. This will help avoid confusion and the need to ask for assistance. If the visitor comes to trust the signs they will be more likely to follow further signs without worrying about losing their way.

Clarity and Coherence: If all appropriate attractions within a given area are signed, and done so coherently, the tourist will be more likely to continue to explore the locality. A clear layout and sign arrangement will reduce confusion and lead to a smooth progression from sign to sign, destination to destination.

Economic Sense: The better the experience a visitor has of a town or locality, the more likely they are to either return or to recommend it to someone else. Moreover, the longer the visitor spends exploring the area, the more likely they are to contribute to the local economy. Having well constructed, durable signs leads to a low maintenance, long lasting system, which will save money in the long term. With such a signage system in place, tourists that had originally not intended visiting heritage sites may well be inclined to do so.

The proposed signage for the scheme will incorporate three different types of sign :

(i) Orientation signs ('you are here' map-type signs indicating the locations of sites of interest relative to a visitor's current position)

(ii) Directional signs (finger signs guiding visitors to and from sites of interest)

(iii) Interpretive signs (giving the visitor interpretive information relating to a particular attraction / site)

It is envisaged that a total of some 100 Historic Towns will be included in this development initiative altogether. Thirty-six of these towns have been selected for inclusion in Phase One (development in 2008). These 36 towns have been selected on the basis of their rating in terms of intrinsic interest in the Shaffrey Report, as well as their having a dedicated Town / Urban District Council to lead the project.

Detailed technical guidelines regarding the specification for the signs, as well as criteria for implementing the programme, have been prepared on Failte Ireland's behalf by consulting engineers, RPS. These guidelines will be distributed in soft copy (electronically)to each of the 36 Town Councils included in Phase One, together with Introductory Letter and Application Form. With a timetable to contact the Town Councils before end November 2007, a two month period has been allowed for the preparation of applications. The deadline of **Monday, January 29th, 2008** is being set for submission to Failte Ireland of applications.

We believe that this programme offers an opportunity to further build on, and further encourage the renewal and pro-active conservation currently underway within many of these towns. It presents a major opportunity to achieve significant progress in developing the infrastructure necessary for success in the ever-more challenging tourism market.

Galway County Council Archives

ELEVATION:

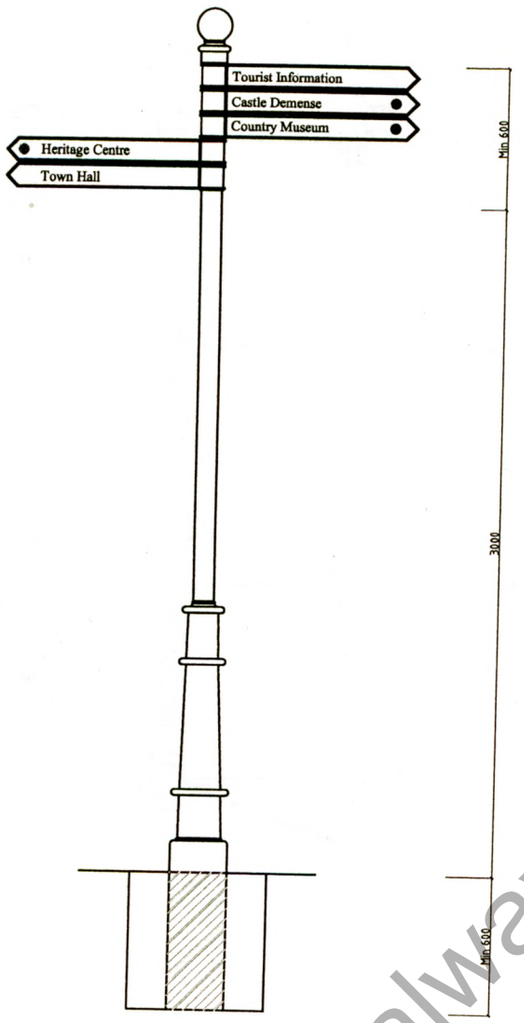

SINGLE LINE TEXT STRING:

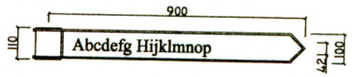

(FULL COLLAR)

(HALF COLLAR - UPPER)

(HALF COLLAR - LOWER)

DOUBLE LINE TEXT STRING:

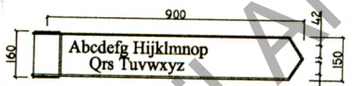

(FULL COLLAR)

(HALF COLLAR - UPPER)

(HALF COLLAR - LOWER)

(EXAMPLE OF BILINGUAL DIRECTIONAL ARM)

TRIPLE LINE TEXT STRING:

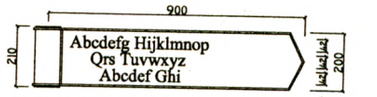

(FULL COLLAR)

(HALF COLLAR - UPPER)

(HALF COLLAR - LOWER)

GROUPED FULL COLLAR ASSEMBLY:

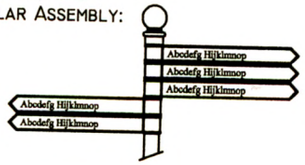

STAGGERED FULL COLLAR ASSEMBLY:

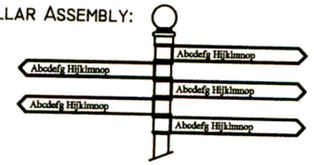

GROUPED HALF COLLAR ASSEMBLY:

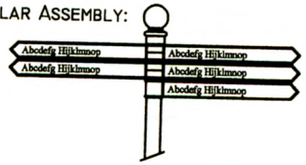

NOTES:

GENERAL
- ALL DIMENSIONS IN MILLIMETERS
- DO NOT SCALE

DIRECTIONAL FINGER ARMS
- ONE PIECE CAST ALUMINIUM, DOUBLE SIDED, WITH INTEGRAL COLLARS (FULL OR HALF)
- SMOOTH GLOSS FINISH, PAINTED DARK GREEN IN COLOUR (RAL COLOUR 6002 LEAF GREEN)
- RAISED LETTERING, PAINTED WHITE IN COLOUR (RAL COLOUR 9016 TRAFFIC WHITE)
- RAISED SYMBOLS (WHERE REQUIRED), PAINTED WHITE IN COLOUR (RAL COLOUR 9016 TRAFFIC WHITE)
- RAISED BORDER (WHERE REQUIRED), PAINTED WHITE IN COLOUR (RAL COLOUR 9016 TRAFFIC WHITE)

SUPPORT POSTS
- GALVANISED CIRCULAR HOLLOW STEEL SECTIONS, 89MM DIAMETER, RUNNING FULL LENGTH
- FITTED WITH ORNATE CAST IRON COLUMN BASE, AND BALL-TOP
- SMOOTH GLOSS FINISH, PAINTED DARK GREEN IN COLOUR (RAL COLOUR 6002 LEAF GREEN)

Galway County Council Archives

Fáilte Ireland National Tourism Development Authority	Fáilte Ireland Historic Town Signage Project	Pedestrian Tourist Signage	Issue	Date	Directional Signs	Drawing No.
			1.	23/10/07		DS0001

Standard Type I Interpretive Panel Sign

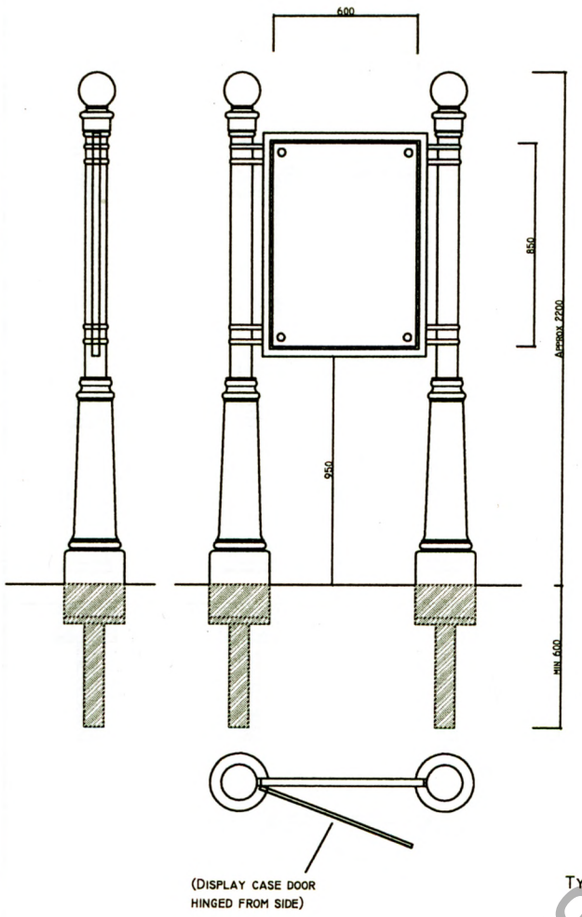

Large Type I Interpretive Panel Sign

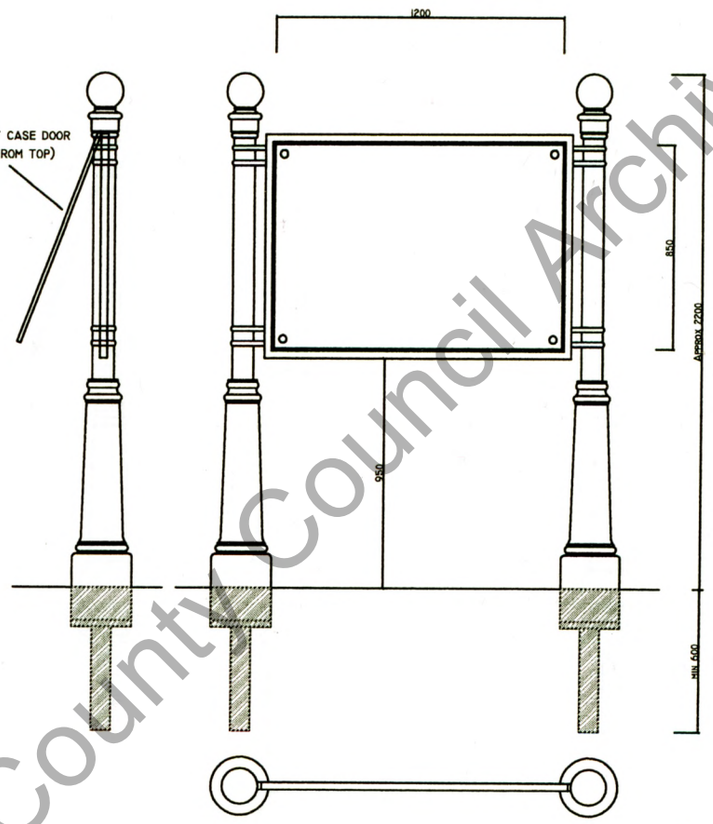

Display Case Construction Detail

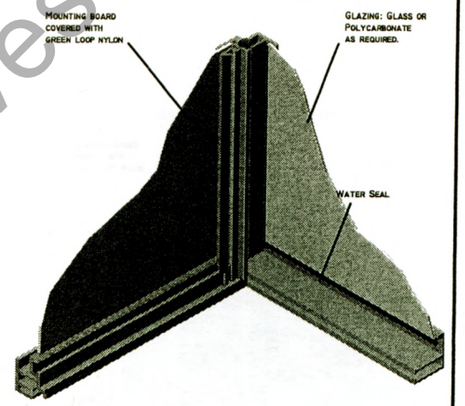

Type II Interpretive Plaque Sign

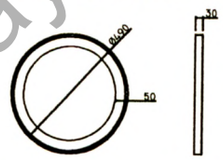

NOTES:

GENERAL
- All dimensions in millimeters
- Do not scale

Type I - Interpretive Display Case

- Double or single sided display case
- Extruded aluminium frame and door
- Powder coated smooth gloss finish, dark green in colour (RAL Colour 6002 Leaf Green)
- Glazing perimeter sealed on both sides with EPDM seal or similar
- Concealed anti-vandal locking system
- Display case flange mounted onto support posts

Support Posts

- Galvanised circular hollow steel sections, 89mm diameter, running full length
- Fitted with ornate cast iron column base, and ball-top
- Smooth gloss finish, painted dark green in colour (RAL Colour 6002 Leaf Green)

Type II - Interpretive Plaque

- Circular plaque made from cast aluminium
- Powder coated smooth gloss finish, dark green in colour (RAL Colour 6002 Leaf Green)
- Raised lettering, painted white in colour (RAL Colour 9016 Traffic White)
- Raised symbols, painted white in colour (RAL Colour 9016 Traffic White unless otherwise required)
- Raised border, painted white in colour (RAL Colour 9016 Traffic White)

Galway County Council Archives

Fáilte Ireland National Tourism Development Authority	Fáilte Ireland Historic Town Signage Project	Pedestrian Tourist Signage	Issue	Date	Interpretive Signs	Drawing No.
			1.	23/10/07		IS0001

STANDARD ORIENTATION PANEL SIGN

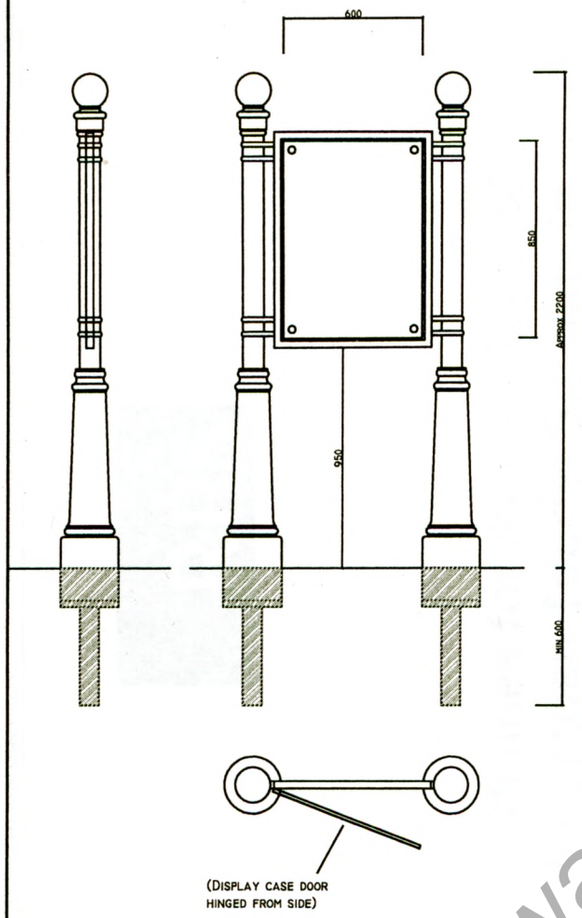

(DISPLAY CASE DOOR HINGED FROM SIDE)

LARGE ORIENTATION PANEL SIGN

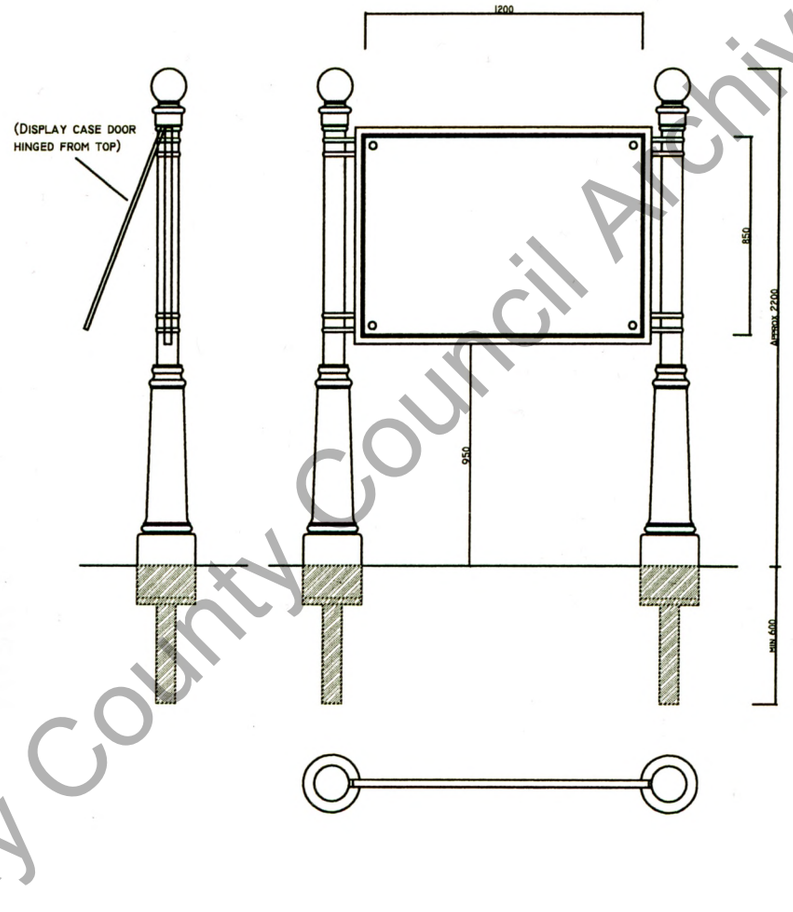

(DISPLAY CASE DOOR HINGED FROM TOP)

DISPLAY CASE CONSTRUCTION DETAIL

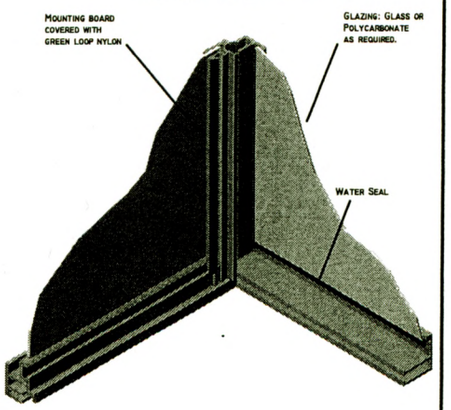

NOTES:

GENERAL
- ALL DIMENSIONS IN MILLIMETERS
- DO NOT SCALE

ORIENTATION DISPLAY CASE

- DOUBLE OR SINGLE SIDED DISPLAY CASE
- EXTRUDED ALUMINIUM FRAME AND DOOR
- POWDER COATED SMOOTH GLOSS FINISH, DARK GREEN IN COLOUR (RAL COLOUR 6002 LEAF GREEN)
- GLAZING PERIMETER SEALED ON BOTH SIDES WITH EPDM SEAL OR SIMILAR
- CONCEALED ANTI-VANDAL LOCKING SYSTEM
- DISPLAY CASE FLANGE MOUNTED ONTO SUPPORT POSTS

SUPPORT POSTS

- GALVANISED CIRCULAR HOLLOW STEEL SECTIONS, 89MM DIAMETER, RUNNING FULL LENGTH
- FITTED WITH ORNATE CAST IRON COLUMN BASE, AND BALL-TOP
- SMOOTH GLOSS FINISH, PAINTED DARK GREEN IN COLOUR (RAL COLOUR 6002 LEAF GREEN)

Galway County Council Archives

Fáilte Ireland National Tourism Development Authority	Fáilte Ireland Historic Town Signage Project	Pedestrian Tourist Signage	Issue	Date	Orientation Signs	Drawing No.
			1.	23/10/07		OS0001

RPS

Guidelines for the Provision of Pedestrian Tourist Signage in Historic Towns

Galway County Council Archives

TABLE OF CONTENTS

1 INTRODUCTION 1

2 SIGNING FOR PEDESTRIAN TOURISTS 2

2.1 INTRODUCTION 2

2.2 ACHIEVING THE AIM – AN EFFECTIVE PEDESTRIAN TOURIST SIGNAGE SCHEME 2

2.3 PEDESTRIAN SIGNAGE - A NATIONAL TEMPLATE 2

3 DEVELOPING A PEDESTRIAN TOURIST SIGNAGE SCHEME 4

3.1 PROCESS OVERVIEW 4

3.2 STEP 1 - DEVELOP A PEDESTRIAN SIGNAGE STRATEGY 4

3.2.1 Identify the main sites of interest 4

3.2.2 Identify the starting points 4

3.2.3 Linking vehicular and pedestrian signage schemes: 5

3.2.4 Identify the routes to and from attractions/sites 5

3.2.5 Identify locations for each type of sign 6

3.3 STEP 2 - DETAILED DESIGN OF SIGNS 8

3.3.1 Orientation Signs 8

3.3.2 Directional Signs 11

3.3.3 Interpretive Signs 13

Notes on Materials 15

Notes on Positioning 16

3.3.4 Installation Checklist 17

4 EVALUATION AND MAINTENANCE 18

4.1 CONTINUAL EVALUATION AND IMPROVEMENT 18

4.1.1 Maintenance 18

Galway County Council Archives

APPENDICES

APPENDIX A FÁILTE IRELAND PEDESTRIAN SIGNAGE TEMPLATES

Galway County Council Archives

1 INTRODUCTION

Fáilte Ireland, the National Tourism Development Authority, is embarking on a project to assist local authorities in developing pedestrian tourist signage for a number of historic towns around the country, which have particular heritage and tourism value. Funding is available from Failte Ireland for this initiative under the National Development Plan (NDP) 2007-2013 Tourism Product Development Infrastructure Fund.

This document is intended to provide guidance to the relevant local authorities of the particular Historic Towns in developing and implementing a pedestrian signage scheme which will guide visitors around local sites of interest, provide interpretation of the sites and thereby improve their overall experience of the town and its surrounding area.

Galway County Council Archives

2 SIGNING FOR PEDESTRIAN TOURISTS

2.1 INTRODUCTION

The aim of this initiative is to develop a nationally coherent, consistent and trustworthy set of pedestrian signs in Ireland's historic towns, to ensure that the experiences of visitors are pleasant, stimulating and welcoming, and to ensure that they can explore an historic town with ease.

2.2 ACHIEVING THE AIM – AN EFFECTIVE PEDESTRIAN TOURIST SIGNAGE SCHEME

- Helps visitors to get around and locate destinations easily, by providing a consistent system of visitor information and visitor way-finding that is user friendly to everyone.
- Provides good information in the right place at the right time.
- Makes particular sites of interest 'easy' to get to and 'easy' to understand.

2.3 PEDESTRIAN SIGNAGE - A NATIONAL TEMPLATE

It is Fáilte Ireland's intention that all pedestrian tourist signage schemes implemented under this initiative will follow a national template, which will offer consistency across the country. The signage will incorporate three different types of signs:

(i) Orientation signs ('you are here' map type signs indicating the locations of sites of interest relative to a visitor's current position)

(ii) Directional signs (finger signs guiding visitors to and from sites of interest)

(iii) Interpretive signs (giving the visitor interpretive information relating to a particular attraction/site)

There are a number of reasons for rolling out a national template for this type of signage:

Appreciation and Interpretation:
Much of what is of interest to visitors in our historic towns is currently not well interpreted or made accessible to them[1]. There is a strong need to identify the sites/points of interest and interpret some of the history to gain a full appreciation of the town.

Familiarity and Trust: Once the visitor becomes familiar with the signs (their colours, type styles, format etc.) they can move from one historic town to the next and easily follow other pedestrian signs. This will help avoid confusion and the need to ask for assistance. If the visitor comes to trust the signs they will be more likely to follow further signs without worrying about losing their way.

Clarity and Coherence: If all appropriate attractions within a given area are signed, and done so coherently, the tourist will be more likely to continue to explore the locality. A clear layout and sign arrangement will reduce confusion and lead to a smooth progression from sign to sign, destination to destination.

[1] Fáilte Ireland Tourism Product Development Strategy 2007-2013, page 26

Galway County Council Archives

Economic Sense: The better the experience a visitor has of a town or locality, the more likely they are to either return or to recommend it to someone else, and the longer the visitor spends exploring the area, the more likely they are to contribute to the local economy. Also, having well constructed, durable signs leads to a low maintenance, long lasting system, which will save money in the long term. With such a signage system in place, tourists that had originally not intended visiting heritage sites may well be inclined to do so.

Galway County Council Archives

3 DEVELOPING A PEDESTRIAN TOURIST SIGNAGE SCHEME

3.1 PROCESS OVERVIEW

The following is an overview of the steps that a local authority should follow in order to develop a coherent pedestrian tourist signage scheme for an historic town of any size (including historic precincts of cities):

Step 1 - Develop a pedestrian signage strategy (identification of attractions, routes and location points for signs)

Step 2 – Carry out detailed design of signs

3.2 STEP 1 - DEVELOP A PEDESTRIAN SIGNAGE STRATEGY

3.2.1 Identify the main sites of interest

This is primarily a desktop exercise which involves the review of available tourist guides and maps to identify the main attractions and sites of interest that will be signed under the pedestrian signage scheme. Consultation with all involved parties/stakeholders should also be carried out, including tourism interests in the town and the relevant Fáilte Ireland Tourism Officer. It is essential for the success of the scheme to get the desired buy-in from all relevant parties at the outset.

The types of attractions / sites of interest to be signed could include (but is not limited to) :

- Historic Buildings
- Abbeys, Churches, etc
- Town Walls
- Heritage Centres
- Museums
- Battle Sites
- Parks
- Tourist Information Offices

Ensure that the attractions/sites of interest themselves are worth visiting. Visitors may lose confidence in the system if they visit sub-standard attractions. Eligible attractions should be either open to the public / physically accessible to the public, have a level of on-site interpretation or be self-explanatory to the visitor.

3.2.2 Identify the starting points

Identify starting points from which pedestrian visitors are most likely to begin to explore the historic town. The most probable starting locations are popular congregation areas in or around the town, preferably with a high volume of people moving through them. Such areas might be:

- Tourist offices or tourist information points
- Bus/train stations

Galway County Council Archives

- Tourist bus parking bays
- Public car parks
- Other points of arrival for pedestrians
- Town squares
- Probable pedestrian walkways or pedestrianised areas
- Seating areas
- Outside large retail buildings etc.
- Other congregation areas
- Areas where visitors will stay overnight in a town, e.g. areas with a particularly high density of hotels and B&B's etc.

Starting points should be clearly identified by a simple name/symbol so that tourists returning from sites of interest can find their way back quickly and easily by following simple and legible directional signs.

3.2.3 Linking vehicular and pedestrian signage schemes:

It is important that a pedestrian signage scheme for a town links in with any existing vehicular signage schemes. Visitors arriving to a town by car should not experience any discontinuity in signage between parking and embarking on a pedestrian tourist trail. Similarly, visitors arriving via public transport, e.g. bus, train, etc. should easily be able to join a signed pedestrian tourist trail.

This can be achieved by providing orientation and directional signage at public car park locations, bus and train stations, and any other locations where visitors may embark on a trail. It is equally as important to provide pedestrian signage that will guide visitors back to their means of transport.

Note: The provision of any 'link up' signage between vehicular road signs and pedestrian signs should not interfere or clutter the road signage.

3.2.4 Identify the routes to and from attractions/sites

Visitors should be routed from starting points to their selected destination(s) and back again in the safest and most visitor-friendly way. The best way of doing this is to 'put yourself in their shoes', which will give a basic understanding of the journeys that visitors will have to make. Again this should be done by reviewing maps of the town area and selecting appropriate routes, but also by walking the proposed routes to judge first hand which route presents the town in the best way and to identify any junctions that may cause confusion. Factors that should be taken into account include:

- Journey length (in both time and distance)
- Number of points of interest along a route (incorporate as many other local attractions as possible along the way without exhausting the tourist with an elaborate diversion)
- The perceived safety of a route (public lighting, 'lonely' areas, etc. Any improvements required are not eligible for grant assistance under this programme)
- Width and condition of footpaths (any improvements required are not eligible for grant assistance under this programme)
- Pedestrian facilities (e.g. pedestrian crossings, dropped kerbs, refuge islands, etc. Any improvements required are not eligible for grant assistance under this programme)

Galway County Council Archives

- Disability facilities (e.g. dropped kerbs, tactile paving, footpath obstructions etc. Any improvements required are not eligible for grant assistance under this programme)
- Are routes fit for a high level of pedestrian usage? (e.g. avoid routes where footpaths are too narrow or where vehicular traffic is too heavy).
- Do routes cater for cyclists?
- Provision of public lighting.
- Keep routes away from major roads and dangerous junctions if possible.

3.2.5 Identify locations for each type of sign

Having identified the main attractions/sites of interest, starting points and walking routes in the Steps above, the locations at which each type of pedestrian tourist sign (orientation, directional, interpretive) is provided must now be carefully considered. Good information in the right place at the right time will be used by the visitor - poor information is likely to be ignored.

3.2.5.1 Orientation Signs

The primary objective of the orientation sign is to help the visitor identify where they are and help them plan their journey through a combination of text and map information. These signs should generally be located at the aforementioned 'starting points' in Section 3.2.2.

Example of orientation sign

Orientation signs should be positioned on footpaths where the visitors will most likely begin their journey. It should be positioned so that there will be no ambiguity over its purpose and will therefore be of optimum use. If there are attractions in more than one direction from the starting point, it should be positioned so that it will capture the visitor before they choose any such route, allowing them to identify any attractions they were previously unaware of and plan a route that may incorporate such attractions.

When positioned at a site as a guide to other attractions a similar template should be followed, whereby as many routes as possible, if not all, are covered by the sign.

3.2.5.2 Directional Signs

Once the tourist is on foot and heading in the direction of the attraction or site of interest, it is imperative that they are kept well informed as to the route they should take. Any attractions/sites that were displayed along the route on the orientation signs must be displayed on all directional signs continuously along that route, until the destination is reached. Directional signs should be located at any decision points along the route to help avoid any confusion. This will also allow people to join a route from any of the signed junctions. If a decision is made to assign colours to different routes then a marker of that colour should be shown on every directional sign along that route, while still maintaining the standard colour background of the Directional sign..

Example of pedestrian directional sign

Looped Pedestrian Routes: Directional signs should always include flags (a directional sign mounted on a single post) leading to the

Galway County Council Archives

destination and flags leading the tourist back to the point of origin. If possible, the return walk should be one of similar length along a different route so as to encourage the tourist to visit more of the town. If this situation exists it can be signed using a system of looped routes. In this situation, orientation signs should show a map of the loop (layouts of signs are discussed in a later section), with key destinations marked on it, and the directional signs could use the colour coded system as mentioned previously, to illustrate the looped routes. Varying length loops could be established within a town, with different attractions along each.

In identifying/developing a looped route, care must be taken to ensure that the route has enough attractions, while avoiding sections that are of little interest. Ideally, to maintain the visitors' interest, a looped route would have attractions evenly spread along its course, however this will rarely occur. To achieve as even a spread as possible, the route can be designed to reach the various attractions in a certain order. The chosen route must also be safe for pedestrians along all sections, with the provision of footpaths, wide verges if in rural areas, or fully pedestrianised streets if possible.

3.2.5.3 Interpretive Signs

Interpretive signs should be used at the entrance/site of an attraction. Interpretive signs should also be placed along any pedestrian route where points of interest are passed. This will encourage the tourist to see the town as an attraction itself and not just a series of disjointed monuments.

Once the main site is reached interpretive signs should be positioned along a route that leads the visitor towards the entrance or along any planned probable route around the site. Obscure or hidden interpretive signs will not be seen and are therefore unnecessary. Also important to include at the heritage sites are either orientation signs and/or directional signs leading tourists on to further attractions or leading them back to their starting point.

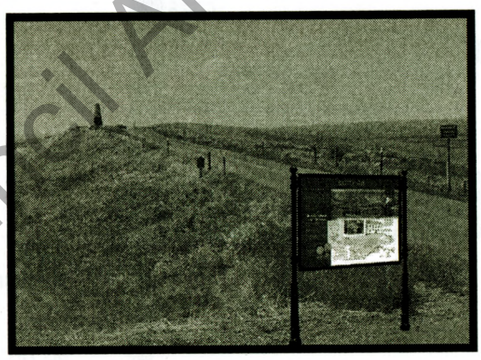

Example of display type interpretive sign

Galway County Council Archives

3.3 STEP 2 - DETAILED DESIGN OF SIGNS

3.3.1 Orientation Signs

Pedestrian orientation signs take the form of an upright display with **a** diagrammatic information map, and should be manufactured and installed to the approved Fáilte Ireland specification (see below). A standard template for this type of sign is included in Appendix B to this document.

What information is to be included on the orientation signs?

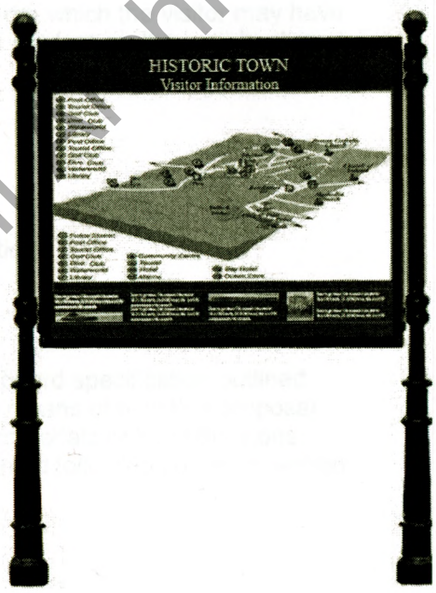

- Name of the town.
- Diagrammatic map of local area with a marker of where the sign is in relation to local attractions, sites and important facilities.
- Legend(s).
- North pointer.
- Names of the main streets.
- Names of selected attractions/sites.
- Routes to attractions/sites.
- Short explanatory notes of main attractions/sites - allows the visitor to identify those attractions they wish to see the most, enabling them to prioritise to get the most from their visit.
- Indication of town hall or other local landmark buildings that can be used for way finding.
- Tourist information centres represented by the 'i' symbol.
- Retail areas/centres - it may be beneficial to the visitor to outline the location of retail areas without being specific on individual outlet names.
- Public toilets.
- Likely areas for eating.
- Local Garda Station.
- Car Hire Locations (if applicable).
- Train / Bus stations
- Local Accident & Emergency / Hospital (where appropriate).
- Any warning messages (local hazards etc).
- Any anti-littering, anti-smoking messages etc.

Note on language: normally all information is presented in English only, however bilingual or Irish only versions of the signs may be acceptable if requested by a Local Authority e.g. where a town is near or in a Gaeltacht area. However it should be borne in mind that information presented in Irish only will generally be of limited benefit to non-national visitors.

Some Do's and Don'ts

Do...

- Keep it simple. Keep it clear.

Galway County Council Archives

- Avoid clutter on the map (list names of attractions/sites to the side of the map and use a number or symbol to specify a location on the map)
- Use colouring to highlight an area of interest and leave surrounding areas in greyscale - this will make it easier for the visitor to identify appropriate routes.
- Use recognisable symbols for each of the main markers in the town, i.e. places where signs are so that visitors can find their way back to their starting point.
- *Use different colours for different routes to various locations. People will identify the colour of the route they wish to take. The colours of such routes can then be indicated by highlighted routes on orientation signs and dots on the directional signs of the same colour. E.g. If a number of looped routes (see section 3.2.5.2) are being signed in a town, with the possibility of the routes intersecting each other, then colour coded orientation and directional signs will make it easier for visitors to follow their intended route.*
- Include a route to find other orientation signs/possible starting points, from which the visitor may have set out from. Providing such routes will ensure that the visitor doesn't get lost on the way back and thereby possibly ruin their experience.

Don't...

- Allow advertising (accommodation, taxi, retail etc)
- Allow any unauthorised signs to be attached to orientation sign installations

Standard Specification

It is recommended that all pedestrian tourist orientation signs follow the standard specification outlined below. (Local Authorities may propose minor variations to this standard by means of a written proposal, outlining details and justification for the variation e.g. requests to use local materials or have the signs designed by local crafts people, etc. Such variations may only be implemented following receipt of written approval from Fáilte Ireland).

Orientation Display Case

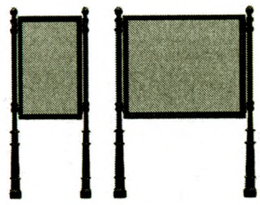

- Double or single sided display case
- Extruded aluminium frame and door
- Powder coated smooth gloss finish, dark green in colour (RAL Colour 6002 Leaf Green)
- Panel Dimensions:
  - Small panel: 600mm (W) x 850mm (H) for A1 displays
  - Large panel: 1200mm (W) x 850mm (H) for A0 displays
- Glazing options:
  - For low vandal risk locations: 4mm toughened float glass
  - For medium or high vandal risk locations: 2mm or 4mm polycarbonate
- Glazing perimeter sealed on both sides with EPDM seal or similar
- Standard panel door hinged on left hand side
- Large panel door hinged from top with support stay (for holding case open)
- Concealed anti-vandal locking system
- Display case flange mounted onto support posts
- Display area fitted with mounting board covered in dark green looped nylon to allow velcro fixing or pin fixing

Support Posts

- Galvanised circular hollow steel sections, 89mm diameter, running full length
- Fitted with ornate cast iron column base, and ball-top (see Appendix B)
- Smooth gloss finish, painted dark green in colour (RAL Colour 6002 Leaf Green)

Galway County Council Archives

Installation

- Display panels should be orientated towards the direction in which the tourist is looking
- Typical foundation for standard panels would be 900 (W) x 900 (L) x 600mm (D) concrete footing, however foundations may require further design where large panels are used.
- 600mm minimum root depth
- Support posts should be protected with plastic or other covering during installation operations.
- New sign installations must be temporarily supported vertically until foundation is fully set.
- When surrounding area has been reinstated, paving slabs reset etc, the protective covering can be removed.

Galway County Council Archives

3.3.2 Directional Signs

Pedestrian tourist directional signs take the form of high-level finger posts signs, and should be manufactured and installed to the approved Fáilte Ireland specification (see below). A standard template for this type of sign is included in Appendix B to this document.

What information is to be included on the directional signs?

- Any attraction/site or important facility referred to on the orientation signs
- Name of each attraction/site on an individual finger arm, and multiple fingers arms can be attached to one support post
- Where considered appropriate, a symbol representing the destination
- Tourist information centres (including the 'i' symbol)
- Colour dot of route, where pedestrian routes have designated colour schemes

Note on language: normally all information is presented in English only, however bilingual or Irish only versions of the signs may be acceptable if requested by a Local Authority e.g. where a town is near or in a Gaeltacht area. However it should be borne in mind that information presented in Irish only will generally be of limited benefit to non-national visitors.

Some Do's and Don'ts

Do...

- Include fingers leading to the destination and fingers in the opposite direction leading the tourist back from the destination
- Sign a destination continuously from the starting point (e.g. the orientation sign), so that a tourist following a route receives adequate direction at all subsequent decision points along the way

Don't...

- Allow any unauthorised signs to be attached to pedestrian directional sign installations.

Standard Specification

It is recommended that all pedestrian tourist directional signs follow the standard specification outlined below. (Local Authorities may propose minor variations to this standard by means of a written proposal, outlining details and justification for the variation. Such variations may only be implemented following receipt of written approval from Fáilte Ireland).

Galway County Council Archives

Directional Finger Arms

- One piece cast aluminium, double sided, with integral collars (full or half)
- Smooth gloss finish, painted dark green in colour (RAL Colour 6002 Leaf Green)
- Raised lettering, painted white in colour (RAL Colour 9016 Traffic white)
- Raised symbols (where required), painted white in colour (RAL Colour 9016 Traffic white) unless otherwise stated
- Raised border (where required), painted white in colour (RAL Colour 9016 Traffic white)
- Finger arm dimensions (Preferred):
  - Single line text string: H 90mm, W 900mm
  - Double line text string: H 150mm, W 900mm
  - Triple line text string: H 200mm, W 900mm
  - Shorter arms of 800mm and 700mm are also permitted where required, however all arms pointing in the same direction should be of the same length
- Lettering style and dimensions (Preferred):
  - 'Times New Roman' font or approved equivalent, in title case
  - 42mm overall height for upper and lower case letters
  - Text to be justified left on both faces of an arm
  - Where a destination/attraction name runs to more that one line, text can be justified centre, however the left hand edge of the longest line of text shall be justified left with other fingers arms located above and below
  - Where symbols are used, they should be located at the arrow end of the arm

Notes:
- Single sided finger arms may be used where visibility to the rear of the sign is obscured (e.g. where located up against a structure)
- Half collar are half of the height of the finger arm sign, allowing two separate arms to be fixed opposite each other at the same position on the supporting post
- Finger arms are attached to support posts with grub screws on the collar
- Collar attachment fixing must ensure no rotation of directional fingers

Support Posts

- Galvanised circular hollow steel sections, 89mm diameter, running full length
- Fitted with ornate cast iron column base, and ball-top (see Appendix B)
- Smooth gloss finish, painted dark green in colour (RAL Colour 6002 Leaf Green)
- Where possible, posts should be manufactured with an internal telescopic post extension of 76mm diameter to allow for flexibility and for the addition of extra finger arms in the future
- When fully extended, the extendable post should allow a clear post length of 1400mm for finger arm attachment
- The telescopic post extension shall be secured by a collar with 4 No. grub screws

Installation

- Support posts shall be completely installed prior to the fitting of directional fingers
- Typical foundation would be 600 x 600 x 600mm square concrete footing, however where a sign assembly is to support a large number of finger arms, foundations may require further design.
- 600mm minimum root depth
- Support posts should be protected with plastic or other covering during installation operations.
- New sign installations must be temporarily supported vertically until foundation is fully set.
- When surrounding area has been reinstated, paving slabs reset etc, the protective covering can be removed.
- Directional fingers can then be attached and post cap or fitting added.
- Fingers pointing in different directions should be staggered where possible to maximise readability of signs

Galway County Council Archives

3.3.3 Interpretive Signs

The purpose of the interpretive sign is to display information deemed relevant to the site being visited. This information can range from facts on the local wildlife to the history of a building. Interpretive signs should be erected at any point along the desired route where a tourist might require more information. Two simple and adaptable forms for interpretive signs have been adopted:

(i) An upright information sign which can be used to display detailed information

(ii) A wall mounted plaque type sign which can be used where a simple explanatory message is required and in areas where space is restricted

It is recommended that all interpretive signs be manufactured and installed to the approved Fáilte Ireland specification (see below). Standard templates for the two types of interpretation sign are included in Appendix B to this document.

Note on language: normally all information is presented in English only, however bilingual or Irish only versions of the signs may be acceptable if requested by a Local Authority e.g. where a town is near or in a Gaeltacht area. However it should be bourn in mind that information presented in Irish only will generally be of limited benefit to non-national visitors.

Some Do's and Don'ts

Do...

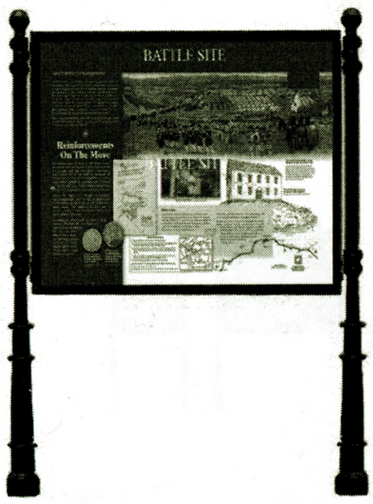

- Keep the panel simple – panels that try to do too much will be ignored.
- Make panels interesting and accessible at a glance. Many people will decide in seconds whether or not they will read it. These few seconds are vital in provoking the interest of the reader.
- Keep proportions to 1/3 graphics, 1/3 text, and 1/3 blank space.
- Communicate one or two main messages only.
- Keep in mind the order in which a visitor reads a panel:
  - The headline
  - The main picture
  - Sub headings
  - Bullet points
  - Further illustrations
  - The main text

  Therefore, to get the message across, it must be communicated by the headline, the main picture, and any sub-headings.
- Use a text hierarchy of different font sizes, with more important text in larger font size. The following is a sample hierarchy of font sizes:

Typography	Suggested Minimum Size
Headlines	12mm, 60-72 point
Sub headings	8mm, 48-60 point
Main text	5mm, 24 point
Captions	5mm, 24 point

- Keep the main body of text to no more than two to three paragraphs of three to four short sentences.

Galway County Council Archives

- Keep text to a maximum of two hundred words.
- Use short punchy sentences. Write in a lively conversational style. Avoid jargon and technical terms such as "sustainability", "analysis", "comprehensive" etc.
- Address the reader in the first person i.e. by referring to them as "you".
- Use active rather than passive verbs e.g. "we look after..." is far better than "the site is looked after by...".
- Use humour, poetry and prose.
- Use photographs, drawings or illustrations where possible.
- Clearly label and annotate any illustrations.
- Ensure that any maps used on interpretive panels are clear and easily understood.

Don't...

- Allow advertising (accommodation, taxi, retail etc)
- Allow any unauthorised signs to be attached to interpretive sign installations

Standard Specification

It is recommended that all pedestrian tourist interpretive signs follow the standard specification outlined below. (Local Authorities may propose minor variations to this standard by means of a written proposal, outlining details and justification for the variation e.g. requests to use local materials or have the signs designed by local crafts people, etc. Such variations may only be implemented following receipt of written approval from Fáilte Ireland).

(i) Upright Interpretive Sign (same as Orientation Sign)

Interpretive Display Case

- Double or single sided display case
- Extruded aluminium frame and door
- Powder coated smooth gloss finish, dark green in colour (RAL Colour 6002 Leaf Green)
- Panel Dimensions:
  - Standard panel 600mm (W) x 850mm (H) for A1 displays
  - Large panel: 1200mm (W) x 850mm (H) for A0 displays
- Glazing options:
  - For low vandal risk locations: 4mm toughened float glass
  - For medium or high vandal risk locations: 2mm or 4mm polycarbonate
- Glazing perimeter sealed on both sides with EPDM seal or similar
- Standard panel door hinged on left hand side
- Large panel door hinged from top with support stay (for holding case open)
- Concealed anti-vandal locking system
- Display case flange mounted onto support posts
- Display area fitted with mounting board covered in dark green looped nylon to allow velcro fixing or pin fixing

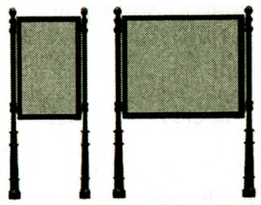

Support Posts

- Galvanised circular hollow steel sections, 89mm diameter, running full length
- Fitted with ornate cast iron column base, and ball-top (see Appendix B)
- Smooth gloss finish, painted dark green in colour (RAL Colour 6002 Leaf Green)

Galway County Council Archives

Installation

- Display panels should be orientated towards the direction in which the tourist is looking
- Typical foundation for standard panels would be 900 (W) x 900 (L) x 600mm (D) concrete footing, however foundations may require further design where large panels are used.
- 600mm minimum root depth
- Support posts should be protected with plastic or other covering during installation operations.
- New sign installations must be temporarily supported vertically until foundation is fully set.
- When surrounding area has been reinstated, paving slabs reset etc, the protective covering can be removed.

(ii) Wall Mounted Plaque Interpretive Sign

Plaque

- Circular plaque made from cast aluminium
- Powder coated smooth gloss finish, dark green in colour (RAL Colour 6002 Leaf Green)
- Raised lettering, painted white in colour (RAL Colour 9016 Traffic white)
- Raised symbols (where required), painted white in colour (RAL Colour 9016 Traffic white unless otherwise required)
- Raised border (where required), painted white in colour (RAL Colour 9016 Traffic white)
- Lettering style and dimensions (Preferred):
  - 'Times New Roman' font or similar approved
  - Headings and Names in upper case
  - Other Information in title case
  - All text to be justified centre
- Dimensions can vary to suit the setting and text to be accommodated:
  - Standard plaque: 490mm diameter (see Appendix B)

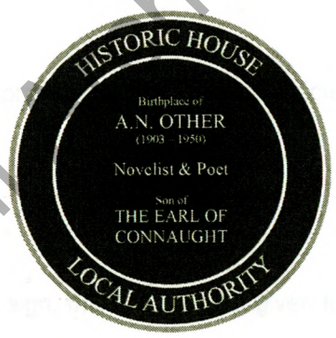

Installation

- Where numerous wall-mounted plaques are required, they should be of a consistent type
- Plaques should be positioned and orientated such that they can be viewed by the visitor
- Installation by screws, mechanical/chemical anchors or by heavy duty adhesive as appropriate

Notes on Materials

The types of materials chosen to construct the signs dictate how easily the sign can be maintained. Due to the fact that these signs are destined for historic towns, the likelihood is that they will be in place for some time. It would therefore be beneficial to use more expensive, robust, easy-to-clean materials (e.g. cast aluminium as per standard specifications above) rather than cheaper materials that may suffer from weather and vandalism, and need replacement in the near future.

Notes on Displays for Orientation and Interpretive Signs

Panel displays should be digitally printed in full colour onto photo quality paper where graphics are used, and general printing paper otherwise. All paper should be protected using a standard plastic laminate pouch for a hardwearing and moisture resistant finish.

Alternative panel displays may be considered subject to the approval of Fáilte Ireland.

Galway County Council Archives

Notes on Mountings, Sign Frames, Sign Supports

These signs are to be placed in predominantly pedestrian areas, and for that reason do not have to meet the standards of road signs. They will however be subjected to people leaning on them, children hanging out of them etc. and therefore should be constructed from durable materials (see standard specifications).

Preferred mountings have been indicated for each sign type in Appendix B. However the local authority or particular site may dictate that other mounting types are more appropriate at certain locations. Other mountings might be:

- Timber or steel posts and frames
- Timber or metal lecterns
- Stone, brick or concrete plinths
- Roofed structures
- On existing walls

Lectern and plinth mounted panels should be at waist height (700-1000mm approx.) and inclined at an angle to cater for wheelchair users and children.

Notes on Positioning

- Use an easily read map to outline the proposed exact location of each sign, this can then be given to those erecting the signs to ensure proper placement.
- Signs should be located where people, and in particular tourists, are most likely to see the sign.
- Ensure that the proposed location acts as a good foundation for the sign.
- For panel signs, ensure there is suitable hard ground for people reading the panel to stand on.
- Particular care should be taken when placing all signs that they do not present a hazard or obstruction to pedestrians or other road users along the route. Ensure appropriate heights, widths and proximity to walkways and roads etc. Note: minimum clearance should be provided for directional signs overhanging footways (2.3m) and cycle ways (2.5m). Where possible a 3.0m clearance should be provided.
- Orientate the panel so that the viewer can relate the site they are looking at to the contents of the panel.
- Try not to install printed panels facing due south to avoid UV bleaching from sunlight.
- Directional signs should be erected in such a way to avoid ambiguity over the direction in which they are pointing.
- Where appropriate, signs should be placed in view but out of reach of visitors. This applies mainly to plaques.
- Proposed locations where signs already exist must be checked, and if any new structure is likely to block an existing structure, the plan should be revised so as to avoid obstruction.
- Consideration must be taken for signs being placed at junctions or along roadsides so as to avoid any possible collisions with passing traffic.

Road Safety Audit

While there is no legislative requirement for a Road Safety Audit to be carried out on a pedestrian signage scheme, it is considered that a safety audit specifically focused on issues relating to pedestrians should be carried out at detailed design stage, and particularly at construction stage, to ensure that the pedestrian signage scheme does not adversely impact on the safety of all users.

Galway County Council Archives

3.3.4 Installation Checklist

- Are all the correct signs designated for the correct junctions and locations etc?
- After installation, check that all signs were erected satisfactorily and that all signs are orientated correctly.
- After installation, walk to each attraction from designated starting points and back again to ensure continuity and to avoid confusion.

Galway County Council Archives

4 EVALUATION AND MAINTENANCE

4.1 CONTINUAL EVALUATION AND IMPROVEMENT

The process of designing and implementing a tourist pedestrian signage scheme is always iterative, as continual improvements and additions to the strategy emerge. Local authorities on a bi-annual basis should carry out monitoring and assessments until the finished scheme matches the vision for the town in terms of quality and appropriateness.

Where any modifications or additions are made to the signage scheme (e.g. a new attraction is added) a review of the existing signage must be carried out to ensure that any new signs fit into this system.

4.1.1 Maintenance

All signs, and particularly signs which include display panels, should be regularly inspected and properly maintained all year round by keeping them clean, preventing algae or fungus build up, removing graffiti, tightening all fittings, and cutting encroaching vegetation.

If any vandalism does occur it should be removed as quickly as possible so as not to encourage further vandalism.

Galway County Council Archives

APPENDIX A

FÁILTE IRELAND PEDESTRIAN SIGNAGE TEMPLATES

See attached PDF

Galway County Council Archives

Galway County Council Archives

Planning your trip

The english language audio-narrative to accompany this tour can be downloaded from www.galwayeast.com/wayfinding. This audio tour describes in detail each of the sites featured in this tour, and can be listened to on your PC, or on an MP3 player while walking the tour. There are 5 other Walking Tours in this series: Ballinasloe, Loughrea, Gort, Tuam and Portumna.

See Ecclesiastical Driving Tour for a comprehensive tour of the main religious sites in Galway East.

For more information on any of the places desribed in this brochure, or for general information on Galway East, contact Galway East Tourism www.galwayeast.com

As Gaeilge

The english language audio-narrative to accompany this tour can be downloaded from www.galwayeast.com/wayfinding. This audio tour describes in detail each of the sites featured in this tour, and can be listened to on your PC, or on an MP3 player while walking the tour. There are 5 other Walking Tours in this series: Ballinasloe, Loughrea, Gort, Tuam and Portumna.

See Ecclesiastical Driving Tour for a comprehensive tour of the main religious sites in Galway East.

For more information on any of the places desribed in this brochure, or for general information on Galway East, contact Galway East Tourism www.galwayeast.com

galway east

Other Interests

1. Earwig Arts Festival

Earwig Tuam Arts Festival is an annual August festival. Earwig are a community organisation that provides Tuam and its surroundings with an outlet for its wealth of creative talent. Using street theatre as an active approach to expanding community involvement in artistic activities. All-comers are welcome to attend and get involved in the festival. www.earwig.art.com

2. Ross Errilly Friary

Standing in serene solitude on the South bank of the Black River, just two miles West of Headford, the Ross Errilly Friary is recognised as the best preserved monastic ruin of its period in Ireland. It was founded in 1351 by the then Archbishop of Tuam Dr. Malachy MacHugh, who was a native of the Headford area.

3. Headford / Lough Corrib

Headford is a friendly village and is an ideal base for angling from the eastern shore of Lough Corrib. Greenfields, 6.5 km west of the town, is a boating harbour. Headford is also the centre of an area rich in archaeological interests, including prehistoric burial cairns, Iron Age stone enclosures, early Norman and later castles and monastic sites.

4. Hotels - 3/4*, boutique hotels, bed and breakfast

A village on the banks of Lough Rea, Mcilhone's was a community have worked hard to improve the amenities for the village, by providing a beautiful river walk. Financed by private donors and in 2000, providing a 2.5 km State forest walk, children's playground, tennis courts and picnic area. They have been awarded the tidiest town in the county seven times.

Other Interests

1. Earwig Arts Festival

Earwig Tuam Arts Festival is an annual August festival. Earwig are a community organisation that provides Tuam and its surroundings with an outlet for its wealth of creative talent. Using street theatre as an active approach to expanding community involvement in artistic activities. All-comers are welcome to attend and get involved in the festival. www.earwig.art.com

2. Ross Errilly Friary

Standing in serene solitude on the South bank of the Black River, just two miles West of Headford, the Ross Errilly Friary is recognised as the best preserved monastic ruin of its period in Ireland. It was founded in 1351 by the then Archbishop of Tuam Dr. Malachy MacHugh, who was a native of the Headford area.

3. Headford / Lough Corrib

Headford is a friendly village and is an ideal base for angling from the eastern shore of Lough Corrib. Greenfields, 6.5 km west of the town, is a boating harbour. Headford is also the centre of an area rich in archaeological interests, including prehistoric burial cairns, Iron Age stone enclosures, early Norman and later castles and monastic sites.

4. Hotels - 3/4*, boutique hotels, bed and breakfast

A village on the banks of Lough Rea, Mcilhone's was a community have worked hard to improve the amenities for the village, by providing a beautiful river walk. Financed by private donors and in 2000, providing a 2.5 km State forest walk, children's playground, tennis courts and picnic area. They have been awarded the tidiest town in the county seven times.

Tuam

Ancient City of Tuam

Tuam

Ancient City of Tuam

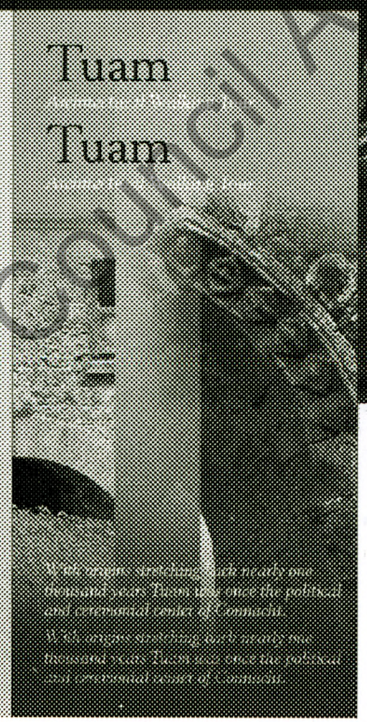

Where stone, stretching back nearly one thousand years. Tuam was once the political and ceremonial centre of Connacht.

Where stone, stretching back nearly one thousand years. Tuam was once the political and ceremonial centre of Connacht.

Cuir dúpiste útat nonsenum ad erostincin euis dit.

Introduction

Tuam stands at the crossing-point of ancient roads which meet at the Market Square in the heart of the town. This key location has encouraged continual development over the centuries.

Tuam's origins stretch back nearly a thousand years. By the beginning of the 12th century it had become the political and ceremonial centre of Connacht, Ireland's western province. Today, Tuam is a market town with about 6,000 people. It lies 32km north of Galway City on the N17.

With recent developments, Tuam is once again reaching the population levels it had in the 1830s, before the Great Famine and the emigration that followed in its wake. The Census of 1831 listed 6,883 inhabitants. This size and level of importance is reflected in the civic and commercial buildings we see around the Market Place and in Shop Street.

Introduction As Gaeilge

Portumna, whose name in Irish, Port-omna, means 'the landing place of the oak', owes its existence to its location near the Shannon where it flows into Lough Derg, the river's largest lake. The town lies a mile to the west of the river on a site designed to be near an imposing castle with a commanding view of the lake's great expanse of water.

It was Richard de Burgo, one of the leaders of the conquering families originating from Normandy, who built the first castle near the river around the year 1226.

The oldest structure in Portumna is the Priory, which started its life around the 13th century as a small foundation of the Cistercians. It and the adjoining Jacobean castle begun around 1610 are Portumna's two most important historic sites.

Galway County Council Archives

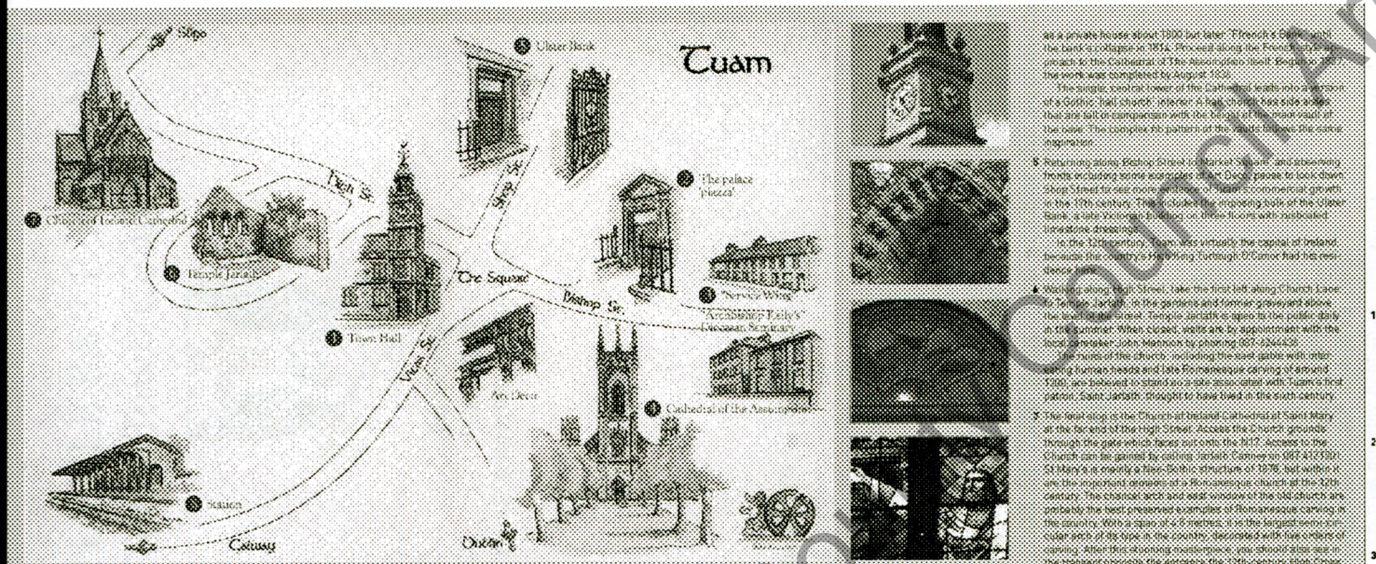

1 In Market Square, the Town Hall is the grandest building of its type in the area. It incorporated an earlier building that was extended in 1853. It has a carriage arch, a limestone façade with cut stone dressings, and it rises at the corner of the site another three levels to give the clock-face stage, vents and cupola that surmount it.

2 Along Bishop Street, on one side, is the pretty, classical, 18th-century building which now contains within its walls a café known as The Palace. It is a seven-bay block of three floors over a basement, the central three bays being slightly stepped forward. It has a stone doorframe with a pediment over it and a most impressive set of double-hung, sliding-sash windows in the late-Georgian style. Into railings guard the basement. Built in 1723, it was the official residence of the head of the Protestant church for the western province until 1956.

The Irish Church Act of 1869 took away the administrative functions that had helped to keep the inhabitants of the Palace in Town busy since 1727.

3 It is worth noting the fine Ulster Bank, built round a courtyard on the corner with Eyre Street, to the back of which is a long line of service wing and stable block to the Palace itself. It would have needed a considerable number of back-up staff to administer the vast estates that Pisces across the huge expanse of Ireland's largest diocese.

4 Enter the Cathedral grounds and the headquarters of the Catholic Archdiocese. The first building is a classical town-built one in 1813, and it stands the handsome Diocesan Seminary, originally built as a private house about 1800 but later "French's Castle" and the bank's collapse in 1854. Proceed along the Front Path to the approach to the Cathedral of The Assumption itself. Begun in 1827, the work was completed by August 1838.

The single, central tower of the Cathedral leads into a church of a Gothic "hall church" interior. It has virtually two aisles in all but name, in comparison with the height of the nave south of the latter. The complex rib pattern of the vaulting is the only ingredient.

5 Returning along Bishop Street to Market Square and stopping briefly en route to note some examples of the Dutch gables in Shop Street to see more examples of this style of commercial growth in the 19th century. The most striking building of the Ulster Bank, a late Victorian building of Bath stone with rusticated limestone dressings.

In the 12th century, Tuam was virtually the capital of Ireland because the country's High King Turlough O'Connor had his seat there.

6 Walking along High Street, take the first left along Church Lane to Temple Jarlath, in the gardens and former graveyard above the level of the street. Temple Jarlath is open to the public daily in the summer. When closed, visits are by appointment with the local caretaker John Mannion by phoning 093-24643.

The ruins of the church, including the east gable with other original human heads and late Romanesque carving of around 1200, are believed to stand on a site associated with Tuam's first patron Saint Jarlath, thought to have lived in the sixth century.

7 The first stop is the Church of Ireland Cathedral of Saint Mary at the far end of the High Street. Access the Church grounds through the gate which faces out onto the N17. Access to the Church can be gained by calling Jarlath Centre on 087 4123301. St Mary's is mainly a Neo-Gothic structure of 1878, but within it are the important remains of a Romanesque church of the 12th century. The chancel arch and east window of the old church are probably the best preserved examples of Romanesque carving in the country. With a span of 6.8 metres, it is the largest semi-circular arch of its type in the country, decorated with five orders of carving. After this stunning restoration in the round stop and in the manner opposite the extensive 13th-century High Cross formerly in the Market Square, and which consists of pieces of two separate stone crosses mounted one on top of the other.

8 You can walk down Vicar Street for about five minutes from Market Square and you will reach the old Railway Station. The railway first came here in 1860. Although lines eventually stretched to all four points of the compass, the Station now no longer provides a train service. The Station building enjoys State protection.

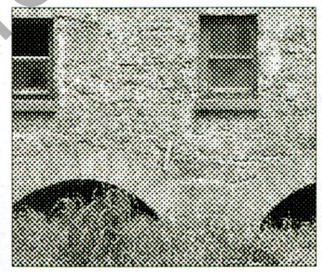

1 Start at the North Gate, or 'the Arch'. It has stood here at the junction with the Tuam road for over 400 years. A fortified town has fortified gates, and Athenry had at least five others dating from around the early 1300s, when the walls first existed.

Passing through The Arch along North Gate Street towards the town centre, observe what once were typical two-storey houses, now with commercial frontages, and the taller masonry 19th-century elevation of The Claymore Café. Turn left into the Market Square, which is at the heart of Athenry.

2 In the Market Square are the remains of the 15th century Market Cross surmounting the stone steps of its plinth. Known as a Lantern Cross, only its head is extant, yet it is the best preserved of its type in Ireland.

Standing on a modern shaft above the plinth, a stone cross-head is carved on one side, with a Crucifixion and figures at the base of the Cross with the Holy Spirit in the form of a dove above and, on the other face, with a Madonna and Child.

3 The stone gateway at the corner of the Square leads into the former church of St Mary's. The ancient, ruined part of the stone church dates from the mid 13th century and was destroyed in 1574 by the Earl of Clanricard's sons. In 1828, half of the site of St Mary's was used to build the Protestant church, which continued in religious use for 100 years and was subsequently rescued from dereliction by being transformed into the Heritage Centre.

Returning to Market Square, walk eastwards, past the impressive Ulster Bank building.

4 From the Bridge, turn right onto Abbey Row and you will come to the three-sided hand-ball Court within the window-less walls of part of the Priory. Opposite, a set of steps for the spectators has been constructed.

Within view of the ball court stands a well-preserved row of 19th century cottages, Abbey Row, with two floors, slate roofs and fine groups of chimneys.

5 Back on Bridge Street, enter the grounds of Athenry Priory, which was founded for the Dominicans by Meiler De Bermingham immediately after his conquests here in 1241. For access to the Priory itself, a key can be obtained from the reception of the Castle or the Heritage Centre.

The church has a cruciform plan, and, mostly, the style of the structures that survive is a form of pointed-arched Gothic, either as plain lancets in the north wall of the chancel, or as tracery windows from the slightly later work. Tombs in the form of wall niches are visible within the church walls. In the mid 1600s, the Priory was briefly a university until it was sacked by Cromwell's troops in 1652.

6 Approach the castle. The rise of the central tower up to its battlements and roof is phenomenal and there are impressive stretches of fortified outer wall enclosing the open castle yard. At the base of the main structure, the walls splay into a broad plinth. The Castle was begun by Meiler de Bermingham and probably reached its first, single story phase by the year 1240. It reached its present height in the 1400's when the pitched roof and gables were added.

It was abandoned by the De Berminghams at the end of the 1400's. They moved into a town-house (now the Ulster Bank) and the old castle fell into ruin. The restoration took place in the 1990's. Court Lane continues round the walls of the town from the Castle gate as you re-enter the town centre once more by the North Gate.

7 At the far end of North Gate street, pass along Church Street on the right to take the walk out to the railway station on the right, five minutes on foot. The stone and brick station was designed in a classical style, and if you imagine travelling from it you will be transported back to the great Age of Steam by its picturesque authenticity.

8 Heading back into the town centre, turn right into Old Church Street; the frontages on the right and the first group on the left are 'burgage plots'. These are narrow, long properties with a building, such as house at the front, and a piece of land stretching out at the rear. The right-hand ones all stretch back as far as the town wall which makes up their rear boundary.

Galway County Council Archives

COMHAIRLE BAILE THUAMA
Tuam Town Council

Cleireach an Bhaile,
Halla an Bhaile,
Tuaim, Co. na Gaillimhe.

Tuath Thuama go Buan

Town Clerks Office,
Town Hall,
Tuam, Co Galway.

Tel: 093 242 46
Fax: 093 70463
Email: tclerk@tuamtc.galwaycoco.ie

Our Ref:

Your Ref:

2nd January, 2008

To each Member of Tuam Town Council

A Chara,

The Monthly meeting of Tuam Town Council will be held in the Town Hall on Monday 7th January, 2008 at 7.00 p.m. You are hereby summoned to attend.

Mise, le meas,

Angela Holian Baile Cleireach

AGENDA

Minutes: Monthly meeting held on 3rd December, 2007
Sub-committee meeting held on 26th November, 2007
Special meeting held on 26th November, 2007
Budget of Expenses meeting held on 26th November, 2007

Manager's Business

Correspondence

The Grove Hospital

Tuam By-pass

C.C.T.V.

Letter dated 22nd November, 2007 from Failte Ireland

Nomination of Member to G.R.D. Partnership Company

Galway County Council Archives

Galway County Council Archives